Prepared for

HPS Development Co., LP
1 Sansome Street, Suite 3200
San Francisco, California 94104

ASBESTOS DUST MITIGATION AND FUGITIVE DUST CONTROL PLAN

RIN# NOA-0023

PARCELS A and A' - PHASE I DEVELOPMENT

HUNTERS POINT SHIPYARD
SAN FRANCISCO, CALIFORNIA

Prepared by

Geosyntec consultants

engineers | scientists | innovators

1111 Broadway, 6th Floor
Oakland, California 94607

Project Number: WR1366

8 June 2015

Asbestos Dust Mitigation and Fugitive Dust Control Plan

Parcels A & A'- Phase I Development
Hunters Point Shipyard
San Francisco, California
RIN# NOA-0023

Prepared by

Geosyntec Consultants, Inc.
1111 Broadway, 6th Floor
Oakland, California 94607

Randolph C. Brandt, PG
Principal

Project Number: WR1366

8 June 2015

TABLE OF CONTENTS

LIST OF FIGURES

LIST OF APPENDICES

ACRONYMS AND ABBREVIATIONS

ATCM	Airborne Toxic Control Measure
BAAQMD	Bay Area Air Quality Management District
BMP	best management practices
CCR	California Code of Regulations
CCSF	City and County of San Francisco
CP	Candlestick Point
DTSC	Department of Toxic Substance Control
HEPA	high-efficiency particulate air
HPS	Hunters Point Project Area
km/h	kilometers per hour
mph	miles per hour
SFDPH	San Francisco Department of Public Health
SWPPP	Storm Water Pollution Prevention Plan
TSP	Total Suspended Particulate
USEPA	United States Environmental Protection Agency

1. INTRODUCTION

This combined Asbestos Dust Mitigation and Fugitive Dust Control Plan (ADM/DCP) has been prepared and submitted by Geosyntec Consultants, Inc. (Geosyntec) under contract to and on behalf of HPS Development Co., LP (HPS DevCo) as part of the planning process for proposed site development activities at the Hunters Point Shipyard (HPS) Parcels A' and A (the Site) in San Francisco, California. Parcels A' and A are located along the northern portion of the former HPS and comprise 75 total acres. Parcel A' is made up of two non-contiguous sub-parcels. The first, commonly referred to as the Hilltop Parcel, comprises approximately 56 acres and contains active development areas. The second sub-parcel, referred to as the Hillside Parcel, comprises approximately 19 acres and contains future development parcels. Parcel A adjoins the Hilltop portion of Parcel A' and contains existing Buildings 101, 110 and 808 and the land immediately surrounding these buildings. A Site Location Map and a Site Plan are depicted on Figures 1 and 2, respectively. To date, HPS DevCo has completed demolition of former structures on Parcel A', executed a mass grading and retaining wall installation project and has completed construction of the backbone infrastructure that will support future development of the Site. The Hilltop parcel is currently undergoing vertical development and the Hillside parcel is currently undergoing horizontal infrastructure development.

The boundaries of the Project Site are shown on Figure 2. Project information is as follows:

Company Name and Address	Project Location/Schedule
HPS Development Co., LP 1 Sansome Street, Suite 3200 San Francisco, CA 94104 Attention: Jeffrey C. Martin Phone: 415-995-1770	The project location is bordered by existing residential neighborhoods on the north and existing Hunters Point Shipyard on the east, west and south (Figure 2).
	San Francisco, CA
	Start Date: June 2005
	Estimated Completion Date of Project: December 2020
	Job Trailer Location: The HPS DevCo job trailer is located along Galvez Avenue and to the south of Donahue. This location may change as new work commences.

2. REGULATORY FRAMEWORK

The Hunters Point Shipyard Reuse Final Environmental Impact Report 2000 (FEIR 2000) includes mitigation measures requiring actions that will reduce or eliminate adverse environmental impacts during development of Parcels A' and A. These mitigation measures were adopted in a Mitigation Monitoring and Reporting Program, dated 19 January 2000. The Disposition and Development Agreement incorporates FEIR 2000 mitigation measures that are relevant for Phase I development on Parcels A' and A and includes the commitments for implementing mitigation measures set forth in Section 20 of the Disposition and Development Agreement and in the EIR Addendum, dated 19 November 2003.

In the summer of 2010, the City and County of San Francisco (CCSF) certified the Candlestick Point-Hunters Point Shipyard Phase II Project Final Environmental Impact Report 2010 (CP-HPS Phase II FEIR 2010), which includes mitigation measures to be implemented during development of some portions of Parcels A' and A on the southern edge of the Hilltop parcel. These mitigation measures were adopted in the Mitigation Monitoring and Reporting Program, dated July 2010.

The applicable mitigation measures for dust control from FEIR 2000 and CP-HPS Phase II FEIR 2010 and the requirement to comply with them were incorporated into the amendments to the San Francisco Health Code Article 31 and corresponding Implementing Regulations that were adopted by the San Francisco Board of Supervisors in the summer of 2010. Submittal of this ADM/DCP and approval by the San Francisco Department of Public Health (SFDPH) is intended to meet the applicable requirements of Article 31 and the Implementing Regulations.

This ADM/DCP specifically identifies the Best Management Practices (BMPs) that will be implemented to reduce air particulate emissions resulting from soil disturbance or excavation associated with grading, utility work, construction of site infrastructure, and foundation construction. This plan also includes monitoring and reporting requirements.

This ADM/DCP has been prepared in response to SFDPH Article 31 requirements and pursuant to Title 17 of the California Code of Regulations (17 CCR) Section 93105, Asbestos Airborne Toxic Control Measure (ATCM) for Construction, Grading, Quarrying and Surface Mining Operations, and the City and County of San Francisco Municipal Health Code Article 31, Construction Dust Control Requirements.

This DCP incorporates requirements of the following applicable codes and regulations

- California Code of Regulations (CCR) Title 17, Section 93105, the Asbestos Airborne Toxic Control Measure (ATCM) for Construction, Grading, Quarrying, and Surface Mining Operations;
- Bay Area Air Quality Management District (BAAQMD) Regulation 2, Permits;
- BAAQMD Regulation 6, Particulate Matter and Visible Emissions;
- City and County of San Francisco Building Code Section 106A.3.2.6, Construction Dust Control;
- City and County of San Francisco Health Code Article 22B;
- City and County of San Francisco Health Code Article 31 and Implementing Regulations;
- City and County of San Francisco Order Number 171,378;
- FEIR 2000 Mitigation Measure 2.B: Construction PM10;
- FEIR 2000 Mitigation Measure 8.A: Handling Naturally Occurring Asbestos during Construction; and
- CP-HPS Phase II FEIR 2010 Mitigation Measure MM HZ-15: Asbestos Dust Mitigation Plans and Dust Control Plans.

Collectively, these regulations and Mitigation Measures specify a goal of "no visible dust" emissions from the Site and outline BMPs required to meet this goal.

Because the Site is within an area that could contain naturally occurring asbestos in the soil and serpentine rock, CCR Title 17, Section 93105 (ATCM) apply to ground disturbing activities at the Site. ATCM includes, among other things, the requirement for submission of an Asbestos Dust Mitigation Plan for BAAQMD approval prior to grading activities. The ATCM also includes specific practices to be implemented during construction. Mitigation Measure 8.A also provides BMPs for handling serpentine material.

Contractors selected to perform construction will be responsible for obtaining applicable permits and complying with permit conditions as described in the project specifications.

Neither HPS DevCo nor any of its contractors, subcontractors, representatives, or agents, shall engage in any construction or grading activity anywhere on the Site, or in conjunction with a Work Site related offsite utility or trenching project, unless the provisions of this ADM/DCP, including without limitation the mitigation measures presented in Section 7.0 and the air monitoring measures presented in Section 8.0, are

implemented at the beginning and maintained throughout the duration of the construction or grading activity.

2.1 ATCM

The asbestos ATCM (17 CCR 93105(b)(1)) states that the ADM/DCP, and the dust mitigation measures contained therein, apply to "any construction, grading...operation on any property [where]...[a]ny portion of the area to be disturbed is located in a geographic ultramafic rock unit." The terms "Construction," "Grading," "Construction or Grading Operation" and "Construction or Grading Activity" are defined in the ATCM to mean "any surface disturbance conducted with powered equipment or any related activity, including, but not limited to, all surface and subsurface cuts and fills, excavation, trenching, stockpiling, bulldozing, and landfills". (California Code of Regulations, Title 17, § 93105, Subdivision (i)(12).).

Regulatory authority for compliance with the ATCM is with the Bay Area Air Quality Management District (BAAQMD). Non-compliance with any provision of this ADM/DCP shall not subject any person or entity to BAAQMD jurisdiction or otherwise implicate BAAQMD enforcement authority except to the extent that such provision is required to be included in this ADM/DCP pursuant to the ATCM without regard to Article 31. All mitigation measures listed in Section 7 and all monitoring requirements listed in Section 8.1 are required to be included in this ADM/DCP pursuant to the ATCM without regard to Article 31. This ADM/DCP was submitted to BAAQMD in September 2014 and was subsequently approved by the BAAQMD on May 20, 2015 (Appendix A).

2.2 Article 31

San Francisco Health Code Article 31, Construction Dust Control Requirements, is intended to protect residents of San Francisco from exposure to construction dust generated by construction activities on Parcels A and A' by requiring Dust Control Plans with monitoring and control measures. Article 31 applies to all construction projects on Parcels A and A' that disturb 50 cubic yards, or more, of soil.

Regulatory authority for compliance with Article 31 is with the San Francisco Department of Public Health (SFDPH). Non-compliance with any provision of this ADM/DCP shall not subject any person or entity to SFDPH jurisdiction or otherwise implicate SFDPH enforcement authority except to the extent that such provision is required to be included in this ADM/DCP pursuant to Article 31 without regard to the ATCM. This ADM/DCP was submitted to the SFDPH in September of 2014 and was subsequently approved by SFDPH on December 16, 2014 (Appendix A).

2.3 No Visible Dust Goal

The dust control measures set forth in this plan are intended to achieve a goal of no visible dust emissions associated with soil disturbance, movement, or excavation of soil, to the extent required by the applicable regulations identified above.

3. PROJECT DESCRIPTION

This Section presents background information for the Site, a description of the of the development activities to occur over the lifetime of the project and a description of the local topography and geology. For purposes of clarity, the following terms and related definitions are used throughout the ADM/DCP:

- Parcel A' – This term comprises both the Hilltop and Hillside sub-parcels. It is 75 acres in total area.
- Project Area – An interchangeable term used alongside Parcel A' and A.
- Hilltop Parcel – 56 acre parcel currently undergoing vertical development. Includes existing buildings 101, 110 and 808.
- Hillside Parcel – 19 acre parcel currently idle and awaiting development (completion of all infrastructure components and vertical development).
- Development Block – Both the Hilltop and Hillside parcels have been subdivided into numbered development blocks (e.g., Block 51 within the Hilltop Parcel)
- Construction Site – Any area of the Site that is undergoing active construction. This term also includes support/staging areas immediately adjacent to the active construction.
- Future Street – Any street within the Site that is either already in place or will be installed via future construction efforts
- Future Park – A number of regional and pocket parks are planned at both the Hilltop and Hillside Parcels. Regional parks are larger in size and pocket parks, typically 5,000 square feet in size, are located immediately adjacent to future Development Blocks.
- Building 101, 110 and 808 – Remaining buildings in the Hilltop Parcel. Buildings 101 and 110 are occupied by artists or local businesses. Building 808 is currently vacant.

3.1 Development Description

Parcels A and A' work will consist of development of horizontal infrastructure to support future development, parks construction, and vertical construction under the control of HPS DevCo. The Site activities will consist of demolition, site grading, utility system installation, paving, foundation excavation, and vertical construction of housing units, a commercial kitchen, and artist studio space.

The proposed project to be executed at Parcels A and A' by HPS DevCo is part of an integrated, mixed-use development program planned for the larger Hunters Point and Candlestick Point (CP) project area. Together, the HPS and CP Site encompasses approximately 780 acres and work includes demolition of existing structures within the project area, mass grading to meet design grades and facilitate surface water drainage, installation of new below grade utilities, construction of new roads, reconstruction of existing roads, construction of public open spaces and construction of new housing and commercial buildings.

It is estimated that the total duration of all development activities across both HPS and CP could exceed 15 years.

3.2 Regional Topography and Site Setting

Parcels A' and A, as set forth in the Quitclaim Deeds for the Hilltop Parcel and the Hillside Parcel of the Hunters Point Shipyard, both recorded on 3 December 2004, together consist of approximately 75 acres and both are located in the northern portion of the HPS. The Hilltop Parcel (56 acres) is located on a topographic high relative to the surrounding portions of the former Hunters Point Shipyard. To the east of the Hilltop Parcel is Parcel B; to the southeast are Parcels UC-2 and C; to the south are Parcels D-1 and G; and to the west are Parcels E and E-2. Existing residential neighborhoods border the Hilltop Parcel on the north.

The Hillside Parcel (19 acres) is also located on a topographic high relative to the surrounding portions of the HPS. To the north, east and west of the Hillside are existing residential neighborhoods, and to the west is Parcel E-2.

Historically, the dominant land use of Parcels A' and A was residential and non-industrial. The Navy-owned residential structures on Parcel A' were demolished prior to Site grading and backbone infrastructure construction. During the mass grading phase of the project, vertically-oriented concrete block keystone retaining walls were installed and newly graded slopes on both the Hilltop and Hillside parcels were seeded to achieve a vegetative cover. During the utility installation phase of the project, concrete road base and curb and gutter were installed across all areas of the Hilltop parcel. The portion of the Hilltop parcel bordering Donahue Street also included sidewalk installation. At the Hillside parcel utility installation is partially complete. At the conclusion of utility installations, the entire Site was stabilized by a combination of hardscape (i.e., paved roads, retaining walls, curb, gutter and portions of sidewalk) and a vegetative cover.

Figure 3 presents the Site location relative to sensitive receptors within 1000 feet of the Site.

3.3 Site History

The United States Department of the Navy (Navy) acquired the title to the land known as HPS in 1940 and began developing its shipyard activities, including shipbuilding, repair, and maintenance. Buildings at HPS included office and commercial buildings such as facilities for warehousing, fuel storage and distribution, and machining and metal fabrication. Between 1976 (the point at which the Navy ceased its operations) and 1986, the Navy leased most of HPS to a private ship-repair company, which conducted activities similar to the Navy's.

HPS has been divided into twelve parcels (Parcels A, B, C, D-1, D-2, E, E-2, F, G, UC-1, UC-2 and UC-3) for purposes of remediation. Multiple investigations have been performed at HPS for over 20 years. Between 1984 and 1993, initial preliminary assessments were conducted facility-wide at HPS. Based on the results of these initial preliminary assessments, subsequent preliminary assessments were performed within Parcels A' and A to further evaluate possible sites for inclusion in the remedial investigation program.

In 1995, the Navy performed a remedial investigation of Parcels A' and A to characterize the nature and extent of chemical contamination in the parcel. The United States Environmental Protection Agency (USEPA), the Department of Toxic Substance Control (DTSC), and Regional Water Quality Control Board (RWQCB) participated and were consulted throughout the Parcels A' and A remedial investigation process and the development of the Record of Decision (ROD). USEPA concurred with the findings of the investigations on 8 November 1995 and signed the ROD on 29 November 1995. The DTSC and RWQCB also concurred and signed the ROD on 28 November 1995. The ROD approved by the USEPA and co-regulatory agencies is the decision document demonstrating that the Navy has taken all necessary remedial actions to comply with Section 120(h)(3) of the Comprehensive Environmental Response, Compensation, and Liability Act of 1980.

A final Finding of Suitability to Transfer Parcels A' and A was signed in January 2001. A revision to the Finding of Suitability to Transfer was completed in March 2002; a second revision was completed in March 2004; and a third revision completed in September 2004. These revisions include a boundary map update, as well as additional information about radiological clearance and other historic activities.

3.4 Regional Geology and Description of Fill Material

The Site is located within the Coastal Range geologic province. Regionally, the subsurface is comprised of anthropogenic fill overlying marine deposits and Franciscan bedrock. The marine deposits consist primarily of interbedded silt, sandy clay, and clayey sand. The sandy clay and clayey sand are collectively known locally as the Bay Mud deposits. The bedrock at and in the vicinity of the Site is the Franciscan Formation, which primarily consists of weathered serpentinite, sandstone, and shale. Asbestos is a naturally occurring mineral found in serpentinite and poses a potential health risk if asbestos fibers are mobilized from the serpentinite rock and released into the atmosphere as a result of grading and/or excavation activities.

The peninsula where HPS is located is within a northwest-trending belt of Franciscan formation bedrock known as the Hunters Point Shear Zone. The rocks within this zone are deformed and sheared and consist of serpentinite with sandstone, shale and lesser amounts of chert and greenstone.

On most of Parcel A and A', the bedrock is close to the ground surface with localized areas of overlying fill material. The fill is of two types: bedrock-derived fill from the upland areas of Parcel A' and fill transported to Parcel A and A' by others. In the low-lying areas, the fill is underlain by Bay Mud. Bay Mud consists of soft, organic-rich, plastic clay and silt, with interbedded lenses of sand and peat. Between the lowland area and the bedrock outcrops, the fill directly overlies bedrock.

3.5 Development Scope of Work

Work at the Site consists of four general activities to be conducted over the lifetime of the project:

- Demolition of existing structures and roads;
- Mass grading and surcharging program;
- Infrastructure improvements (below grade utilities, streets, other surface completions and park construction); and
- Vertical Construction, including fine grading, shoring, foundation construction, and utility service tie-in.

For each of these activities, this ADM/DCP will define minimum mitigation measures to be employed as long as earth disturbing activities are occurring. These mitigation measures are described in greater detail in Section 7.

4. LOCATIONS OF SERPENTINITE-CONTAINING SOIL WITHIN THE SITE

As stated in Section 3.4, bedrock and soil within the Site may contain serpentinite that may or may not contain asbestos fibers at concentrations of concern. For this reason, all development activities that have the potential to disturb bedrock or soil at the Site will be subject to this ADM/DCP.

5. LAND USES WITHIN 0.25 MILE OF WORK SITE WITH SERPENTINE SOILS

Land use within 0.25 mile of the Work Site is generally light/heavy industrial, residential, a school, a child care center, parks and open space and commercial. For purposes of this ADM/DCP, sensitive land uses are defined as a residence, school, childcare center, hospital or other healthcare facility or group living quarters located within 0.25 miles of the work Site. Within 0.25 mile of the Work Site, potentially sensitive land uses include residences, the Willie Mays Boys and Girls Club, located at 195 Kiska Road, and the Center for Self Improvement (a K-12 school, same address). Located at 729 Kirkwood (adjacent and to the south of 195 Kiska). This facility is a child care and school for children ages 0 to 5. No hospitals or nursing homes are known to exist within 0.25 mile of the Work Site.

6. POTENTIAL SOURCES OF DUST EMISSIONS

While all parties understand that soil disturbance and excavation activities, by their nature will produce dust, which may or may not contain asbestos dust, Site controls will be used to mitigate visible dust as it is generated in an effort to achieve the no visible dust goal. This section lists methods for control of fugitive dust generated by soil disturbance or excavation including:

- Demolition Activities — Wrecking, moving or dismantling of any load-supporting structural member or portion of a building; any related cutting, disjointing, stripping, or removal of structural elements; and crushing of concrete for recycling/reuse.
- Construction Traffic — Movement of construction equipment and/or materials around the Work Site on unpaved travel routes or on dirt-covered paved surfaces. Vehicular traffic on paved or unpaved roads and parking lots.
- Site Preparation and Foundation Work — Grading, placement of fill soil, excavation of footings and foundations, installation of shoring and backfilling operations.
- Trenching and Road Construction Activities — Excavation of trenches for the installation of underground utilities.
- Material Stockpiles — Stockpiles of excavated soil from trenching activities or stockpiles of fill material.
- Cleanup and Final Site Grading — Backfilling, grading, and re-vegetating of the excavated areas.
- Any other "Construction," "Grading," "Construction or Grading Operation" or "Construction or Grading Activity" as defined in California Code of Regulations, Title 17, § 93105, subdivision (i)(12).

These activities have the potential to cause dust emissions and related dust mitigation measures applicable to these activities are addressed in Section 7.0.

7. DUST MITIGATION MEASURES

This section describes minimum mitigation measures that must be employed at the Site when earth disturbing activities are taking place. If these minimum mitigation measures are found to be insufficient, additional contingency measures, outlined in Section 7.9, must be implemented.

7.1 Track-out Dust Prevention and Control

Track-out dust results when vehicles leave the Work Site with residual dirt or dust on the tires or undercarriage of the vehicle. This residual dirt or dust becomes deposited on the paved road surfaces leaving the Work Site and can later be stirred up as airborne dust by subsequent vehicle traffic. In order to control track-out, the following control measures will be implemented:

1. Removal of any visible track-out from a paved public road at any location where vehicles exit the work site; this shall be accomplished using wet sweeping or a HEPA filter equipped vacuum device at the end of the work day or at least one time per day.
2. Installation of one or more of the following track-out prevention measures:
    a. a gravel pad designed using good engineering practices to clean the tires of exiting vehicles;
    b. a tire shaker;
    c. an automated wheel wash system;
    d. pavement extending for not less than fifty (50) consecutive feet from the intersection with the paved public road; or,
3. Wheel wash stations at areas where vehicles exit onto paved public roads from unpaved roads.
4. Inspection and cleaning of horizontal surfaces on trucks that can collect soil (e.g., bumpers, fenders, etc.)

7.2 Active Soil Storage Piles

A soil storage pile is considered active if material is added to, or removed from a soil storage pile within 7 calendar days. In order to control fugitive dust emissions from active soil storage piles one or more of the following control measures will be used:

1. Adequately wetting the exposed surface with water; or,

2. Use of a temporary cover (plastic sheeting, tarp, etc.).

7.3 Inactive Surface Areas and Storage Piles

Dust emissions from excavations, other exposed soil-disturbed areas, and soil storage piles that will remain inactive for more than 7 calendar days shall be controlled by one or more of the following control measures:

1. Adequately wetting the exposed surface with water at a frequency necessary to control dust emissions.
2. Establishing and maintenance of a surface crust sufficient to satisfy the test requirements in Section (h)(6) of the ATCM.
3. Application of chemical dust suppressants or chemical stabilizers according to the manufacturers' recommendations.
4. Covering with tarps or vegetated cover.
5. Installation of wind barriers of fifty (50) percent porosity around three (3) sides of a storage pile.
6. Installation of wind barriers across open areas.

To prevent the general public from accessing soil storage piles, security fencing will be erected and maintained around the Site area where the soil storage piles are located.

7.4 Dust Mitigation for Roads, Parking Lots, and Staging Area

7.4.1 Dust Mitigation Measures for Unpaved Roads, Parking Lots, and Staging Areas

In order to control fugitive dust emissions from construction traffic traveling on unpaved surfaces, the following mitigation measures shall be used.

1. No vehicle will exceed 5 miles per hour (mph) (8 kilometers per hour [km/h]) on unpaved surfaces or 15 mph on paved surfaces within the Work Site. Visible speed limit signs will be posted at the Work Site entrances.
2. One or more of the following:
    a. Watering every 2 hours of active operations or sufficiently often to keep the area adequately wetted;
    b. Applying chemical dust suppressants consistent with manufacturer's directions;

c. Maintaining a gravel cover with a silt content that is less than five (5) percent and asbestos content that is less than 0.25 percent, as determined using an approved asbestos bulk test method, to a depth of three (3) inches on the surface being used from travel; or

Implementation of erosion control measures identified in the Construction SWPPP, to be provided separately but implemented concurrently, will help control fugitive dust emissions within the Work Site as well as on public roadways, staging areas and parking areas.

7.4.2 Dust Mitigation Measures for Paved Public Roads

The following mitigation measures shall be used to control fugitive dust emissions from construction traffic traveling on paved public roads:

1. No vehicle of any type will be allowed to exit unpaved portions of the Work Site except through treated Work Site exits. For a description of these Work Site exits, see Section 7.1.
2. Construction areas adjacent to and above grade from any paved public roadway will be treated with BMPs, as specified in the Construction SWPPP.

The use of dry rotary brushes is expressly prohibited except where preceded or accompanied by sufficient wetting to limit visible dust emissions. Use of blower devices is expressly forbidden.

7.5 Dust Mitigation for Earth Moving Activities

Excavation activities will be visually monitored daily for the generation of fugitive dust. If dust is being generated, water will be applied to the point of excavation or disturbance to control dust.

In order to control fugitive dust emissions generated from earth moving activities the following methods shall be used:

1. Pre-wetting the ground to the depth of anticipated cuts. A dedicated water source (e.g., fire hose) will be used at each point of excavation to ensure that adequate moisture is present to minimize dust generation. This water source will be directed both at the point of excavation and the point of drop off into an awaiting dump truck or an existing soil storage pile, as appropriate.

2. Suspending grading operations when wind speeds are high enough to result in dust emissions crossing the property line, despite the application of dust mitigation measures.
3. Application of water prior to any land clearing.

7.6 Control for Offsite Transport

Any material generated from activities conducted within the Work Site and which material is to be transported off Site must be done so with vehicles that are maintained such that:

1. No spillage can occur from holes or other openings in cargo compartments;
2. The loads are adequately wetted and either:
    a. Covered with a tarp; or
    b. Loaded onto the trucks such that the material does not touch the front, back or sides of the cargo compartment at any point less than twelve (12) inches from the top and that no point of the load extends above the top of the cargo compartment.

Trucks carrying loose soil or sand will be covered before they leave the Work Site. If concrete and/or asphalt are to be hauled off Site, reasonable effort will be made to remove excess soil adhered to the material to be hauled off Site.

7.7 Post-Construction Stabilization

Both the ATCMs and the FEIR 2000 Mitigation Measure 8A, Handling Naturally Occurring Asbestos during Construction, includes details on post-excavation stabilization for exposed serpentine material. When compared, the FEIR 2000 Mitigation Measure 8A is more robust than that specified in the ATCMs. Therefore, this ADM/DCP will utilize the post-construction stabilization measures to achieve compliance with both the ATCMs and FEIR 2000 Mitigation Measure 8A In a memo to SF Planning Department (SFDPH, June 2011) about this mitigation measure, SFDPH Environmental Health Section (EHS) requires that the exposed serpentine material be covered with one of the following cover types:

1. One foot of clean, non-asbestos-containing fill soil (i.e., soil that contains less than 0.25% by-weight asbestos);
2. Hardscape (e.g., sidewalk, road, building foundation).; or
3. Vegetative cover that holds soil in place.

The June 2011 memo also clarifies that MM 8A also specifies "institutional controls" which must be implemented "to prevent future exposure to naturally occurring asbestos from excavation activities." The purpose of the institutional control requirement is to assure that the post-excavation stabilization measure(s) will remain in place as long as the serpentine material is present. SFDPH EHS concludes in their June 2011 memo that the institutional control requirement is satisfied by the ongoing obligation to comply with the Building Code's Construction Dust Control and the Health Code's Article 31 requirements.

In addition, the 2010 Amendments to San Francisco Health Code Article 31 and the corresponding Implementing Regulations contain requirements for submittal of a Serpentinite Cover Plan and the requirement to describe the implementation of this Plan in the required Article 31 Closure Report submittal.

7.8 Off-Site Transportation

If surplus soil and/or rock is to be transported off Site, it will first be analyzed for asbestos content along with other analytes to gain acceptance into an appropriate disposal facility.

If surplus soil and/or rock is scheduled for offhaul and disposal, the following waste management methods, at a minimum, will be used when handling the material:

1. Keep the material adequately wetted at all times during handling and loading.
2. Adhere to requirements of BAAQMD Regulation11, Rule 2, Section 608 for marking of vehicles used to transport asbestos-containing waste, if present.
3. Maintain waste shipment records as specified in BAAQMD Regulation 11, Rule 2, Section 502.
4. Provide a copy of the waste shipment record to the disposal site owner or operator upon delivery.
5. Contact transporter and/or owner of the disposal site if the waste shipment has not arrived within 35 days of initial acceptance by the transporter as hazardous waste.
6. Provide a written report to the Air Pollution Control Officer (APCO) if the waste shipment is not received within 45 days of initial acceptance by the transporter

7.9 Contingency Dust Control Measures

In the event the above measures are not successful at controlling dust emissions from the construction activities, one or more of the following activities will be considered

and implemented until the condition stabilizes and as based on air monitoring levels criteria described in Section 8.1.7:

- Any designated haul roads will be watered more frequently as necessary to control windblown dust and dust generated by construction vehicle traffic when in use by the contractor.
- Streets adjacent to the Work Site locations will be swept as necessary to remove accumulated dust and soil. Only wet sweeping methods or a HEPA filter equipped vacuum device will be used. Dry rotary sweeping methods will not be used.
- Water may also be applied to paved roads leading between Work Sites, when necessary.
- Vehicle trips will be reduced to the extent practicable.
- Construction employees will park personal vehicles on paved surfaces.
- The construction schedule will be prioritized to the extent possible to install permanent cap over potentially asbestos containing soil by placement of concrete road base and curb/gutter.
- Imported clean aggregate base rock may be used for placement of the final 6 to 12 inches of necessary fill to raise the grade to final subgrade elevation and provide a cover over potentially asbestos containing soil.
- Paved public roads will be washed at the end of each work day.
- Additional water trucks will be utilized to aid in wetting paved public roads, and Work Site roads as needed, throughout the day.
- Installation of a misting system can be used up to as much as 24 hours per day as needed to aid in keeping soil moist after construction activity has ceased each day.
- Drop heights will be minimized when dropping soil into an awaiting dump truck.
- Periodic watering of haul routes from the point of excavation to the drop-off point regardless of whether the route is paved, unpaved or within or outside the defined Work Site.
- A dedicated laborer will be assigned to each point of excavation to sweep, shovel or otherwise push soil inadvertently dropped on adjacent paved roads within the Work Site. If appropriate, an excavator may be used to push soil back into a trench.
- A mechanical sweeper will be utilized at and around points of active excavation and/or backfill occurring on paved streets to prevent soil from collecting on paved surfaces. This measure will be employed to help control track out of sediment onto paved public streets. Only wet sweeping methods or a HEPA

filter equipped vacuum device will be used. Dry rotary sweeping methods will not be used.

If compaction will not take place immediately following clearing and grubbing, the surface soil will be stabilized with dust palliative and water to form a crust on the soil surface.

Graded areas will be stabilized with chemical stabilizers within 5 working days of verification of final grading completion. All unpaved, inactive portions of the Work Site will be seeded and watered to maintain a grass cover if they are to remain inactive for long periods of time.

All clearing, grading, earthmoving, and excavating activities will be halted during periods of sustained strong winds (hourly average wind speeds of 25 mph (40 km/h) or greater).

The areas subject to excavation, grading or other construction activity will be limited at any one time.

In the event blasting is required, the blasting activities will be designed to reduce the potential for fugitive dust emissions. Guidance from the BAAQMD staff report will be followed which may include covering the blast area with wet soil. The amount of soil used will be based on best engineering judgment taking into consideration the amount of the charge, the size of the blast area, and the proximity to receptors and other structures.

Asbestos emissions from demolition activities will be controlled in accordance with the requirements of BAAQMD Section 11-2-303, as described in a separate plan.

8. AIR MONITORING

This section describes the air monitoring protocol to be used at the Site. The monitoring consists of two components: i) airborne asbestos dust monitoring in accordance with the ATCMs; and ii) fugitive dust (particulate) monitoring in accordance with Article 31. Also presented are those specific actions that must be taken by HPS DevCo if the level of airborne asbestos is detected at or above project action levels. Airborne asbestos and fugitive dust monitoring locations are depicted on Figure 2.

At the start of the project, airborne asbestos and fugitive dust monitoring are required when earth disturbing activities are active. The ATCMs may allow for a decrease in frequency and possible cessation of airborne asbestos monitoring but only after consultation with, and approval by, BAAQMD staff. SFDPH Article 31 may also allow for a decrease and possible cessation of fugitive dust monitoring, depending on the results of the initial monitoring and the documented compliance of the construction contractor with this Plan. When the project ceases to disturb soil, monitoring may also cease, but only with the proper notifications and/or approvals by SFDPH and BAAQMD.

No airborne asbestos or particulate monitoring is required when the construction Site is shut down and no work is being conducted and no vehicles are being driven on unpaved surfaces. This is the presumed condition on weekends and holidays. If work is planned for the weekend or on holidays, HPS DevCo will notify the SFDPH and BAAQMD of this plan at least 48 hours prior to the scheduled work. This notification will occur via email.

8.1 Airborne Asbestos Dust Monitoring Program

This section describes the details of the airborne asbestos dust monitoring program. Although the Hilltop and Hillside work areas are geographically separated, activities in either area have the potential to impact the same sensitive receptor populations (see Figure 3). To address this condition, the airborne asbestos dust monitoring program is designed to monitor airborne particulate emissions from the combined work areas but to maintain flexibility to monitor each area individually.

Section 8.1.2 identifies that the airborne asbestos dust monitoring network will consist of 5 high volume air sampling instruments that are stationed throughout the Hilltop and Hillside work areas. Section 8.1.4 presents protocol for operating the monitoring stations in a manner that addresses conditions when earthwork is occurring in both areas (Hilltop and Hillside) or when earthwork is occurring only in one discrete area (Hilltop

or Hillside). The protocol is intended to allow operational flexibility such that if a Hilltop monitoring station detects a level of airborne asbestos above the action level (see Section 8.1.7), Hilltop contractors will temporarily suspend earth disturbing activities while Hillside contractors will remain active. Similarly, if a Hillside station detects a level of airborne asbestos above the action level, earthwork would be suspended in that area while earthwork would continue in the Hilltop area. If monitoring stations detect levels of airborne asbestos above the action level at both locations or if it cannot be determined which location has caused the reading above the action level, earthwork in both areas will be suspended until such time that a determination can be made or the levels have declined below action levels.

8.1.1 Air Sampling Equipment

Sampling at all airborne asbestos monitoring stations will be conducted using battery operated heavy duty vacuum pumps. Either model SKC 1532 and/or Model BGI 100 or an equivalent model vacuum pump will be used for each of the monitoring stations. The battery will be a marine grade deep cycle 12 volt battery, or equivalent. A battery charging station will be set up at a secure location at the Site to ensure adequately charged batteries are always available for pump operation. Selected equipment will be of the type that is used extensively in air sampling for asbestos.

The sampling train will consist of the following; pump, a flow regulator/dampener, a lockable air flow adjustment valve, tygon tubing and filter cassette assembly. The cassette will be attached to a tripod, or equivalent, to ensure the filter cassette maintains a constant elevation of 4 feet above ground surface. The filter cassettes will have a 25 millimeter open face cowl and will consist of a mixed cellulose ester (MCE) filter with a 0.45 micron pore size.

Each of the pumps, battery packs, sampling trains and cassettes will be inspected regularly to ensure proper operation. To prevent vandalism, sampling equipment will be placed in locked boxes and, if possible, behind locked fences. In the event monitors are found to not be operating properly, as soon as practicable BAAQMD staff will be notified of the location, monitor name, time discovered, plan of action and estimated time needed to complete repairs.

8.1.2 Siting of Airborne Asbestos Sampling Devices

A Work Site perimeter airborne asbestos monitoring network using high-volume Total Suspended Particulate (TSP) methodology has been established to measure and document the concentration of airborne asbestos dust in ambient air. The original monitoring network was established in 2005 and was operated on an almost continual

basis through the submittal date of this ADM/DCP. The airborne asbestos monitoring program included a total of five sampling locations to determine the concentration of airborne asbestos resulting from Site activities that could potentially be transported off Site. Monitoring stations were positioned at upwind, downwind and crosswind locations relative to earth disturbing activities. HPS DevCo has generated over 9 years of data which indicate that required mitigation measures have been effective at keeping airborne asbestos concentrations well below the action level.

Prior to earthwork being initiated at the Site in 2005, airborne asbestos monitoring locations were selected based on locally measured wind speed and direction data as provided by an onsite meteorological station and data provided by a weather station located in close proximity of the Site (i.e., the weather station at SFO). The attached wind rose diagram (Figure 4) illustrates the general historical wind speed, direction and frequency of occurrence at SFO; SFO is located less than 3 miles from the Site. This information was used to establish the location of local airborne asbestos monitoring stations. Site airborne asbestos monitoring locations were selected in cooperation with BAAQMD air monitoring staff. Historically, the sampling was conducted at or near Site property lines at five locations.

This ADM/DCP will rely on the locations of airborne asbestos monitors depicted on Figure 2; three airborne asbestos monitoring stations are located within the Hilltop Parcel (HV-1, HV-2 and HV-4) and two airborne asbestos monitoring stations are located within the Hillside Parcel (HV-5 and HV-6).

Airborne asbestos sampling equipment has been located to avoid sheltered or dead air spaces and areas where particle trapping may occur. Sample intake ports are elevated to approximately 4 feet above grade and are placed in areas clear of physical obstructions.

Construction activities may require temporary relocation of airborne asbestos monitors within the vicinity of the locations shown on Figure 2. Should one of the monitors be in direct conflict with construction activities, it may be moved up to 50 feet from its location shown on Figure 2 without notification. Once the construction activities within the conflicting area are complete, the airborne asbestos monitor(s) will be placed back at their originally approved location.

8.1.3 Modifications to Airborne Asbestos Monitoring Program

As new areas within the Site become active and as other areas are stabilized with one of the three methods presented in Section 7.7, it may be necessary to move airborne asbestos monitoring stations to ensure that adequate coverage of active work areas is maintained. If a new area of the Site becomes active that is significantly distant from an

existing network, it may be necessary to create a new airborne asbestos monitoring network. If one or more monitors must be moved to maintain coverage or if a new airborne asbestos monitoring network is proposed, the BAAQMD will be notified at least 7 days in advance of the proposed move or proposed addition. In no case will any monitor be moved more than 50 feet without first obtaining approval from the BAAQMD. Other instances that could call for a modification to the airborne asbestos monitoring program may consist of new analytical methodologies, further reduction or possible cessation of monitoring. In any instance, BAAQMD staff must first approve the modification(s) before its implementation in the field.

The notification to the BAAQMD must be in writing and include the following minimum information:

1. The reason(s) for the move;
2. If necessary, the reason(s) for the new monitoring network;
3. A description of new monitoring location(s);
4. A map depicting the current and proposed monitoring locations;
5. A map depicting current and future areas to be disturbed;
6. A description of any other proposed changes to monitoring protocol; and
7. Any other information that will help BAAQMD staff in determining whether the proposal can be approved.

Once the monitoring program modification is approved by BAAQMD, the necessary adjustments will be made in the field and updated records and communication will be stored with this ADM/DCP at an on Site location.

8.1.4 Sampling Duration and Frequency

Each high-volume air monitoring station, when in operation, will consist of a continuous 24-hour sampling period from approximately 3:30 PM to 3:30 PM the next working day. During holidays and weekends in which no earth disturbing activities occur, air monitoring will not be conducted. The frequency of monitoring will consist of the following regimen:

Active Area	Monday	Tuesday	Wednesday	Thursday	Friday
Hilltop	HV-1 HV-2 HV-4	HV-1 HV-2 HV-4	HV-1 HV-2 HV-4	HV-1 HV-2 HV-4	HV-1 HV-2 HV-4
Hilltop & Hillside	HV-1 HV-2 HV-4 HV-5 HV-6	HV-1 HV-2 HV-4 HV-5 HV-6	HV-1 HV-2 HV-4 HV-5 HV-6	HV-1 HV-2 HV-4 HV-5 HV-6	HV-1 HV-2 HV-4 HV-5 HV-6
Hillside	HV-2 HV-5 HV-6	HV-2 HV-5 HV-6	HV-2 HV-5 HV-6	HV-2 HV-5 HV-6	HV-2 HV-5 HV-6
No Activity	None	None	None	None	None

Notes:

1. If work occurs on Saturday, utilize the Thursday regimen
2. If work occurs on Sunday, utilize the Friday regimen.

At the time of sample collection and set up for the next monitoring run, a field technician will record in a field notebook the sample ID number, the sample location, the date and time the pump was activated, the date and time the pump was deactivated, the flow rate at the start of sampling, the flow rate at the end of sampling, the calculated average flow rate, and the calculated total volume of air pumped during the sampling run. All data will be transcribed onto the chain-of-custody form that will remain with the samples until they are delivered to the analytical laboratory.

A rotameter will be used to calibrate the flow rate both before and after sample collection. The rotameter will be attached to the end of the sampling train to check the flow rate before the prior day's cassette is removed. This is accomplished by placing a specialized cover over the cowl that allows a rotameter to be attached to the cover. The field technician will read the flow rate and record the reading. After the reading is recorded, the sample cassette is removed, labeled and placed in a sealable plastic bag. Once complete, a new cassette is fitted onto the end of the tygon tubing, the cover placed over the cowl, the rotameter attached to check the flow rate at the start of sampling. If an adjustment is necessary, the technician will turn the regulator until the desired flow rate is achieved. The desired flow rate is between 2.5 and 2.7 liters per minute.

At the conclusion of set up at all monitoring locations, the samples will be promptly delivered to a California accredited analytical laboratory for analysis. All samples will be accompanied by the chain-of-custody filled out for that day's sampling.

8.1.5 Analytical Method and Procedure

All asbestos air samples will be analyzed by transmission electron microscopy (TEM) per the United States Environmental Protection Agency, Asbestos Hazard Emergency Act (AHERA) criteria pursuant to Title 17 of the California Code of Regulations (17 CCR) Section 93105. The following exceptions are required by the ATCM and will be included:

1. The analytical sensitivity shall be 0.001 structures per cubic centimeter (0.001 s/cc); and
2. All asbestos structures with an aspect ratio greater than three to one (3 to 1) shall be counted irrespective of length.

For purposes of consistency with other adjacent airborne asbestos monitoring programs, the asbestos data will be reported in structures per cubic meter (s/m³).

8.1.6 Reporting and Data Availability

All results from monitoring stations will be distributed to all project stakeholders via email on a daily basis regardless of the magnitude of the detected concentrations. The email distributions for air monitoring results will include BAAQMD staff, HPS DevCo development staff, general contractors working on behalf of HPS DevCo, and SFDPH staff.

A cumulative database of all air monitoring results and any on Site wind monitoring data results from project inception to the present will be updated and maintained in the project files. The cumulative air monitoring data will be updated on a monthly basis and the wind data updated on a weekly basis. These data compilations can be made available to BAAQMD and SFDPH staff upon their request.

8.1.7 Air Monitoring Triggered Dust Mitigation Measures

In the event that ambient air monitoring results indicate levels equal to or above 16,000 s/m³ from any BAAQMD-approved air monitor, HPS DevCo shall notify the BAAQMD as soon as practical of the monitoring results indicating: the project RIN, sampler ID and location, actual TEM structures per cubic meter, the date the sample was taken and the date analysis was reported. Additionally, all earth disturbing activity within the monitoring network in which the level of airborne asbestos was detected at or above 16,000 s/m^3 will be suspended until dust is abated and the restart criteria is achieved.

If earthwork is occurring in both areas and a Hilltop monitoring station detects a level of airborne asbestos above the action level, Hilltop contractors will temporarily suspend earth disturbing activities while Hillside contractors will remain active. Similarly, if a Hillside station detects a level of airborne asbestos above the action level, earthwork would be suspended in that area while earthwork would continue in the Hilltop area. If monitoring stations detect levels above action levels at both locations or if it cannot be determined which location has caused the reading above the action level, earthwork in both areas will be suspended until such time that a determination can be made or the levels have declined below action levels and the restart criteria is achieved.

8.2 Fugitive Dust Monitoring Program

Fugitive dust monitoring will be conducted by visual and mechanical means throughout the duration of construction and earthwork. Daily visual monitoring during all earth disturbing activities is the primary responsibility of the contractor. If criteria are exceeded regarding dust generation at the point of earth disturbance the contractor must follow the processes outlined in Section 7.0 to rectify the particular operation causing the problem.

8.2.1 Perimeter Air Monitoring Instruments

Prevailing wind at Hunters Point is from the west or southwest and towards the east or northeast, as shown on Figure 4. As each development sub-phase becomes active within the Parcels A' and A Site, decisions about monitoring will be made independently for each sub-phase, or taken together to establish a monitoring network that will provide coverage for all active areas. In addition, if the potential dust generating activities are contained within even smaller work areas within each sub-phase, then decisions about those areas can be made independently.

Monitoring locations will initially coincide with those selected for the airborne asbestos dust monitoring program (see Section 8.1). Fugitive dust monitoring locations will be checked regularly and adjusted if necessary to maintain downwind coverage.

Real-time particulate dust monitors with data logging capabilities will be used to monitor for particulates. The action level and details of the monitoring instruments, locations, and the monitoring frequency will be memorialized by HPS DevCo based on the Particulate Monitoring System and Approval Form attached in Appendix C. The details of the system (layout, number of monitors, etc.) can be changed, as needed. The use of this Appendix C form and the ability to change the parameters of the monitoring are intended to allow flexibility within the overall objectives of the particulate monitoring program while still meeting or exceeding all health standards. Once the

Appendix C form is completed and prior to construction start, it will be submitted to SFDPH for their records.

National Ambient Air Quality Standards (NAAQS) and the California State Ambient Air Quality Standards (CSAAQS) are designed to protect the general public from airborne particulates generated in the urban, suburban and rural environments. The NAAQS and the CSAAQS are not meant to be applied to project specific actions and related air quality. Rather, those standards are used in an attempt to attain city or region-wide ambient air quality goals for the benefit of the general public. The current standards are:

- 24 Hour National Ambient Air Quality Standard
  - PM-10: 150 micrograms per cubic meter average per 24 hour day (Not to be exceeded more than once per year on average over 3 years)
  - PM-2.5: 35 micrograms per cubic meter average per 24 hour day (98th percentile, averaged over 3 years)
- 24 Hour State Ambient Air Quality Standard
  - PM-10: 50 micrograms per cubic meter average per 24 hour day

It should be noted that the City and County of San Francisco (CCSF) is a non-attainment area for the NAAQS for PM-2.5. CCSF is also a non-attainment area for the CSAAQS for PM-10. Non-attainment areas are areas of the country where air pollution levels persistently exceed the NAAQS as designated by U.S. Environmental Protection Agency (USEPA.)

8.2.2 Visible Dust Monitoring During Site Activities

This section establishes the steps that must be taken toward achieving the goal of no visible dust from soil disturbance or excavation in terms of the amount of time permitted to address visible dust plumes. The criteria in this section apply to an active Construction Site when equipment and personnel are driving on the Site and performing work activities. The “initial observation” starts the clock for the required response measures described below. The “initial observation” is the time any of the following personnel observe visible dust: (a) workers who are disturbing soils or excavating for the permitted activity or (b) any HPS DevCo representative, supervisor, contractor, subcontractor or consultant with responsibility for monitoring the permitted activity including the independent third party.

8.2.3 Visible Dust Crossing the Property Boundary

In the event visible dust from soil disturbance or excavation is observed crossing the property boundary, the following procedures will be followed to ensure adequate mitigation measures are in place to address the dust:

1. The specific source of the emissions will be immediately shut down and a more aggressive application of the existing mitigation measures described in this Section 4 will be directed.
2. Once the mitigation measures have been applied, the source of emissions will resume and observations will be conducted to verify that the mitigation measures were successful.

8.2.4 On-Site Visible Dust

In the event visible dust from soil disturbance or excavation is observed on-site, but does not cross the property boundary, the following procedures will be followed to ensure adequate mitigation measures are in place to address the dust:

1. A more aggressive application of the existing mitigation measures described in this Section 7.4 or additional methods of dust suppression will be directed to the specific source of emissions within 60 minutes of the initial observation.
2. If, despite these more aggressive and/or additional measures, the visible dust emissions continue for 90 minutes from the time of the initial observation, the specific source of emissions will be temporarily shut down until the implemented dust control mitigation is effective or, due to changed conditions, no longer necessary.

8.2.5 Windblown Visible Dust during Inactive Periods

The standards in this section apply on weekends, holidays, or any other times when no equipment and personnel are performing work activities at the Construction Site. In the event of observations of windblown visible dust plumes from soils originating on the Construction Site, mitigation measures described in this Section 7 will be directed by the contractor within less than 4 hours of making the observation. Mitigation measures will be applied until the visible dust plumes originating from the Construction Site are minimized or eliminated. Any observations of visible dust originating from the Construction Site during inactive periods should be reported to the HPS DevCo Hotline at 866-5-Lennar.

8.3 Independent Third Party Inspections

An independent third party will observe the potential dust generating activities and implementation of the ADM/DCP mitigation requirements and make notations on the Inspection Checklist (Appendix D); this form may be amended from time to time. The details of the independent third party observation schedule can be changed as needed to maintain sufficient variability in inspection time. This variability in inspection time has been found to be an effective means to ensure proper contractor response when administering dust mitigation measures.

The checklist results will be reviewed with the contractor on a regular basis. The Independent Third Party will submit the checklists to HPS DevCo and SFDPH on a regular basis. The schedule for inspections, review and submittal of the checklists will be specified through the Particulate Monitoring System Approval Form (Appendix C).

The Hunters Point Project area, and San Francisco in general, is subject to significant daily variation in wind direction and speed. For example, the wind can be calm in the morning and can then increase significantly in the afternoon. Wind direction will be determined with a wind sock, nearby weather station data, or other similar wind direction monitoring device. This variation in daily wind direction and speed will be documented on the Appendix D checklist. The Appendix D checklist also contains information concerning site activities, descriptions of specific dust mitigation measures and any recommendations for enhanced mitigation measures if found to be necessary. Shut down periods that occur during normal work hours will be noted on the Inspection Checklist, or other report.

8.4 Community Relations

The Community is encouraged to assist in monitoring and reporting conditions that are not in compliance with this ADM/DCP. A publicly visible sign with the telephone number to contact regarding dust, noise, or odor complaints will be posted prior to starting construction and maintained during construction. For general complaints, the contractor will respond and take corrective action within 24 hours.

During hours of active construction phone calls will be answered or returned as soon as practicable. During non-work hours phone calls may be diverted to a message machine and returned the next business day.

FIGURES

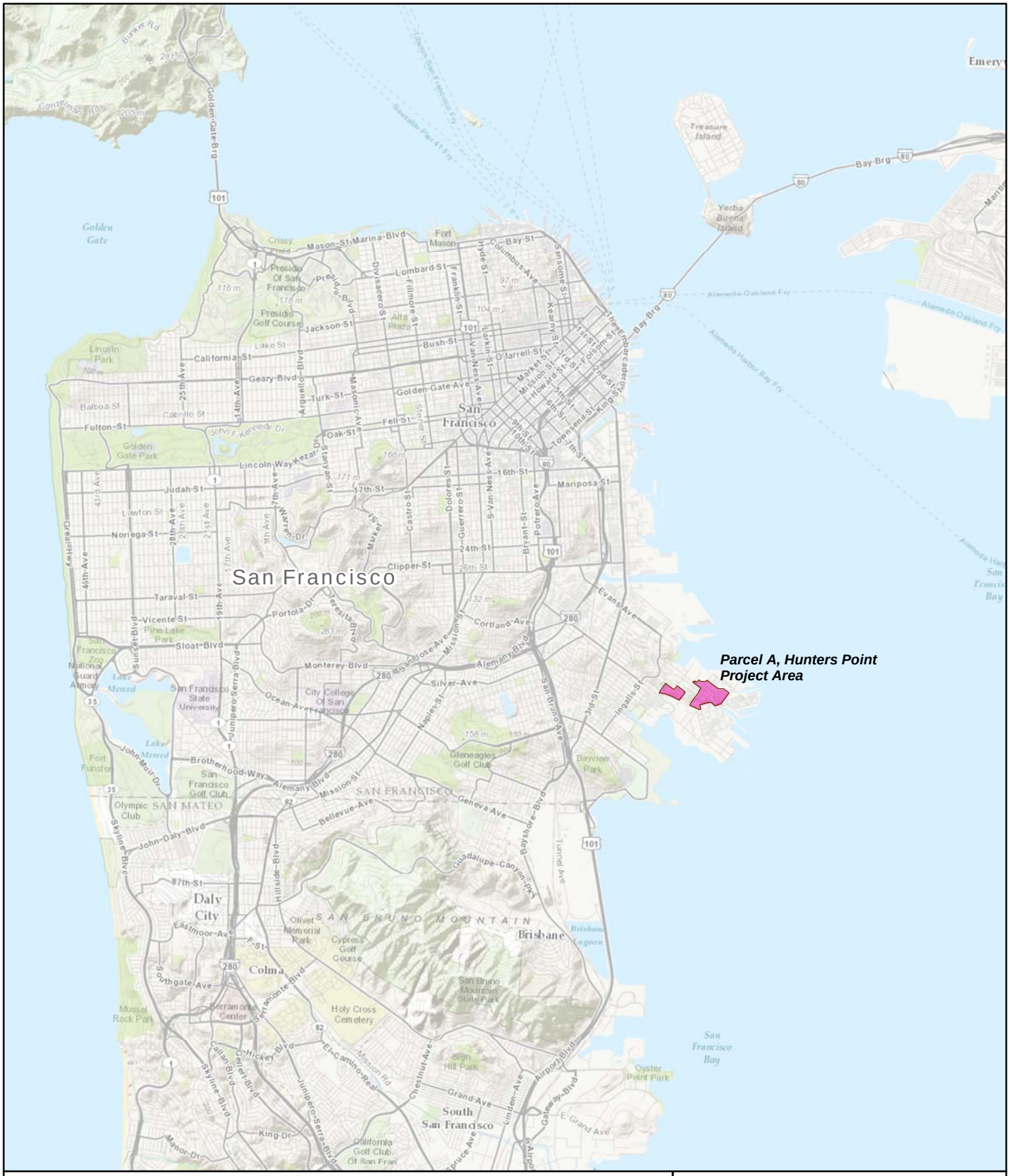

Legend

0 8,000 Feet

N

Site Location Map

Parcel A, Hunters Point
San Francisco, California

Geosyntec consultants

Figure 1

WR1366 | July 2014

P:\GIS\Lennar\HuntersPoint\Project\2014Jul\Fig01_SiteMap.mxd 7/9/2014 12:19:50 PM

Legend

- Airborne Asbestos Monitor Location
- Dust Monitor Location
- Co-Located Dust and Airborne Asbestos Monitor Location
- HPSA Boundaries
- HPAP Project Area Boundary

N

0 600 Feet

Site Plan and Monitoring Location Map

Parcel A and A', Hunters Point
San Francisco, California

Geosyntec consultants

WR1366 | May 2015

Figure 2

P:\GIS\Lennar\HuntersPoint\Project\2014Jul\Fig02_MonitoringLocation_HPSA.mxd 5/13/2015 9:42:48 AM

Legend

- 1000 Foot Buffer
- Sensitive Receptor
- Parcel A Boundary

N

0 800 Feet

1000 Foot Buffer and Sensitive Receptors

Parcel A, Hunters Point
San Francisco, California

Geosyntec consultants

WR1366 | July 2014

Figure 3

P:\GIS\Lennar\HuntersPoint\Project\2014Jul\Fig03_1000ft_Buffer.mxd 7/9/2014 12:55:38 PM

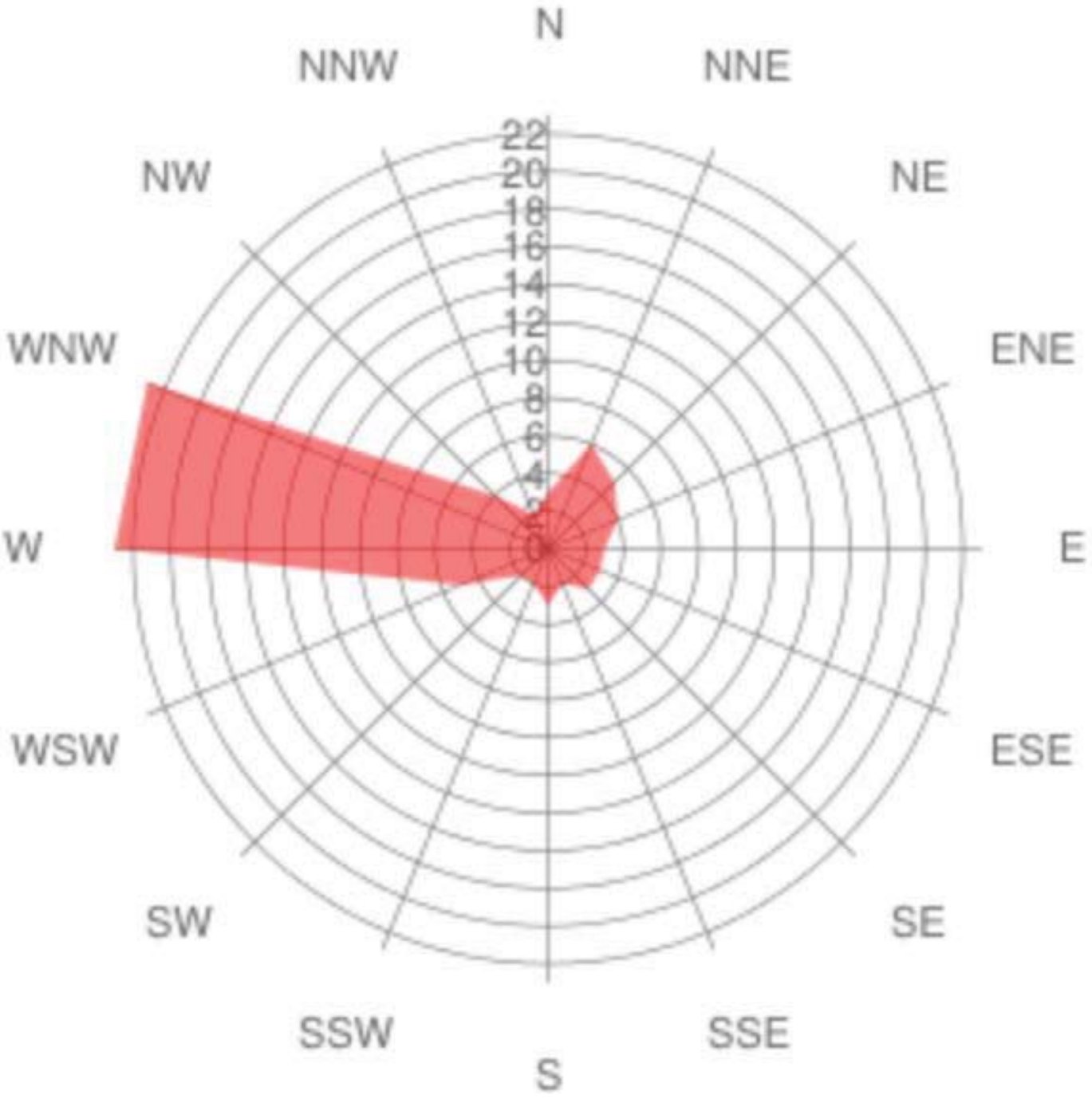

Wind rose represents data recorded at San Francisco International Airport between 11/2006 and 1/2014.

Wind Rose Diagram

Parcel A, Hunters Point
San Francisco, California

Geosyntec consultants

Figure 4

WR1366 | July 2014

P:\GIS\Lennar\HuntersPoint\ai\2014Jul\Fig04_Rose 7/9/2014 12:19:50 PM

APPENDIX A

ADM/DCP Approval Documentation from BAAQMD (May 20, 2015) and SFDPH (December 16, 2014)

BAY AREA
AIR QUALITY
MANAGEMENT
DISTRICT

May 20, 2015

Jeffrey Austin
Geosyntec Consultants, Inc.
1111 Broadway, 6th Floor
Oakland, California 94607

Re: **ADMP RIN # NOA-0023 Amendment**
Project: **Hunters Point Shipyard Parcel A and A' Phase 1 Development, San Francisco**
Applicant: **HPS Development Co., LP (HPS DevCo)**

Dear Mr. Austin,

This letter is in response to the Asbestos Dust Mitigation Plan ("ADMP") referenced above for the subject project submitted to the Bay Area Air Quality Management District ("District") by Geosyntec Consultants, Inc. on behalf of the HPS Development Co., LP pursuant to subsection (e)(2)(A) of the Asbestos Airborne Toxic Control Measure for Construction, Grading, Quarrying, and Surface Mining Operations, Section 93105, Title 17, California Code of Regulation ("Asbestos ATCM").

The reference identification number ("RIN") for this ADMP remains **NOA-0023**; when making inquiries or filing record submittals regarding this ADMP, please refer to the RIN.

The District received the revised ADMP on May 19, 2015, and determined the ADMP meets the applicable criteria pursuant to subsection (e)(4) of the Asbestos ATCM, provided the Dust Mitigation Measures enumerated in the following sub-sections are adhered to throughout the duration of construction and/or grading activities at the project:

7.0 **Dust Mitigation Measures**
- 7.1 Track-out Prevention and Control
- 7.2 Active Soil Storage Piles
- 7.3 Inactive Surface Areas and Storage Piles
- 7.4 Dust Mitigation for Roads, Parking Lots, and Staging Area
- 7.5 Dust Mitigation for Earth Moving Activities
- 7.6 Control for Offsite Transport
- 7.7 Post-Construction Stabilization

In addition, approval is subject to the requirements set forth below:

<u>Air monitoring</u>:

1. The District approves the proposed monitoring on condition that:
   a. Air Monitoring be conducted in accordance with the Naturally-Occurring Asbestos ("NOA") ambient perimeter air monitoring protocols contained in the ADMP.
   b. Transmission electron microscopy (TEM) air sample results shall be continuously compiled throughout the duration of ground disturbance activities at the project into a data spreadsheet and reported in units of total structures per cubic centimeter. The spreadsheet shall be submitted for

District review once every two weeks. Submit the spreadsheet electronically to Compliance@baaqmd.gov (identifying the project RIN # in the Subject of each email).

c. Standard Operating Procedures for sample collection, processing and shipping, as well as all calibration records for flow measuring devices, and records of the date and location of each monitor shall be available for inspection.

Startup notification:

- The applicant shall submit electronic notification at least one week prior to beginning construction and/or grading activities at the project site to Compliance@baaqmd.gov (identifying the project RIN # in the Subject of email).

This ADMP is the basis for compliance with the Asbestos ATCM for the Hunters Point Shipyard Parcel A and A'- Phase 1 Development Project, and its terms must be implemented throughout the duration of the construction project. At the conclusion of the project, a letter stating the final date of work and detailing the post construction stabilization activities shall be submitted to Compliance and Enforcement at:

Director of Enforcement
939 Ellis St., San Francisco, CA 94109

Any questions you may have regarding this ADMP should be directed to Kevin Vo, Air Quality Specialist, at (415) 749-8620.

Sincerely,

Jeffrey McKay
Deputy Air Pollution Control Officer

City and County of San Francisco
DEPARTMENT OF PUBLIC HEALTH
ENVIRONMENTAL HEALTH

Edwin M. Lee, Mayor
Barbara A. Garcia, MPA, Director of Health
Richard J. Lee, MPH, CIH, REHS
Acting Environmental Health Director

ARTICLE 31 APPROVAL

Date: December 16, 2014
Project Name: Hunters Point Shipyard Development Project, Parcels A and A'
Article 31 Case Numbers: 4, 6, 7, 8, 9, 11, 12, 13, 14, 15 and 16 – 2014 Asbestos Dust Mitigation and Fugitive Dust Control Plan dated December 2014 Approval
Site Addresses: Multiple
Project Sponsor: HPS Development Co, L.P
Mailing Address: One Sansome Street, Suite 3200, San Francisco, CA, 94104
Contact Name: Jeff Martin
Phone: (415) 995-1770
Email: jeffrey.c.martin@lennar.com
Additional Contact Name: Jeffrey Austin
Additional Contact Phone: (415) 218-0027
Additional Contact Email: JAustin@Geosyntec.com

The Asbestos Dust Mitigation and Fugitive Dust Control Plan dated December 2014 was submitted to support the ongoing Hunters Point Shipyard Development Project, Parcels A and A', Phase I Development (the Site). This Plan applies to ongoing development work at various blocks and parcels at the Site. The requirements must be incorporated into all applicable work at the Project. This was an update to the previously approved December 2013 Plan.

Any proposed modifications to monitoring frequency or data submittal frequencies and SFDPH approval will be documented through the use of the Appendix C Approval Form. You are also required to submit the completed Appendix D Inspection Checklist based on field inspections.

If you have any questions about this approval, please contact Amy Brownell, P.E. at 415-252-3967 or amy.brownell@sfdph.org.

Sincerely,

Richard J. Lee, MPH, CIH, REHS
Director of Environmental Health (Acting)

HEALTH CODE ARTICLE 31 PROGRAM
1390 Market Street, Suite 410, San Francisco, CA 94102
Phone 415-252-3967 | Fax 415-252-3889

APPENDIX B

Construction SWPPP BMPs

WM-1 Material Delivery and Storage

Description and Purpose: This waste management and pollution control measure is used to prevent, reduce, or eliminate the discharge of pollutants by minimizing the storage of hazardous materials onsite, storing materials in a designated area, installing secondary containment, and conducting regular inspections.

Suitable Applications

Material delivery and storage control measures apply to soil stabilizers and binders; Pesticides and herbicides; Fertilizers; Detergents; Plaster, Petroleum products such as fuel, oil, and grease; Asphalt and concrete components; Hazardous chemicals such as acids, lime, glues, adhesives, paints, solvents, and curing compounds; Concrete compounds; and other materials that may be detrimental if released to the environment.

Implementation

Delivery & Storage

- Generally, construction materials should be stored off the ground, under cover, and, in temporary containment areas in certain cases.
- Material Safety Data Sheets (MSDS) should be supplied for all materials stored but are also accessible immediately by calling 1-800-451-8346.
- Designate areas onsite for material delivery and storage areas.
- Material delivery and storage areas should be located near the construction entrances, away from drainage areas, watercourses, and heavy traffic areas if possible.
- Place containment areas in an area which will be paved if possible.
- Install a stabilized entrance at the entrance to the storage area if vehicles or equipment will enter from a paved surface to an unpaved storage area.
- Stockpiles should be protected in accordance with WM-3, Stockpile Management.
- Materials should be stored in their original containers and the original product labels should be maintained in place in a legible condition. Damaged or otherwise illegible labels should be replaced as soon as possible.
- Materials should be stored indoors within existing structures or sheds when available.
- If stored outside, cover and store liquids, chemicals, boxed materials, drums, and materials with the potential to migrate during a storm on pallets, away from water courses and in secondary containment such as earthen dikes, horse troughs, or even a children's wading pool or "bus boy trays" for non-reactive materials such as detergents, oil, grease, and paints.
- Liquids, petroleum products, and substances listed in 40 CFR Parts 110, 117, or 302 should be stored in approved containers and drums and should not be overfilled. Containers and drums should be placed in temporary secondary containment facilities for storage.

Containment Facility

- A temporary containment facility should provide for a spill containment volume able to contain precipitation from a 25-year storm event, plus the greater of 10% of the aggregate volume of all containers or 100% of the capacity of the largest container within its boundary, whichever is greater.
- A temporary containment facility should be impervious to the materials stored for a minimum contact time of 72 hours.
- A temporary containment facility should be maintained free of accumulated rainwater and spills. In the event of spills or leaks, accumulated rainwater and spills should be collected and placed into drums. These liquids should be handled as a hazardous waste unless testing determines them to be non-hazardous. All collected liquids or non-hazardous liquids should be sent to an approved disposal site.

- Sufficient separation should be provided between stored containers to allow for spill cleanup and emergency response access.
- Incompatible materials, such as chlorine and ammonia, should not be stored in the same temporary containment facility.
- Throughout the rainy season, each temporary containment facility should be covered during non-working days, prior to, and during rain events.

Hazardous or Regulated Materials

- Hazardous materials storage onsite should be minimized.
- Hazardous materials should be handled as infrequently as possible.
- Chemicals should be kept in their original labeled containers.
- An ample supply of appropriate spill clean up material should be kept near storage areas.
- Also see WM-6, Hazardous Waste Management, for storing of hazardous materials.
- If significant residual materials remain on the ground after construction is complete, properly remove materials and any contaminated soil. See WM-7, Contaminated Soil Management. If the area is to be paved, pave as soon as materials are removed to stabilize the soil.
- Storage of reactive, ignitable, or flammable liquids must comply with the fire codes of your area. Contact the local Fire Marshal to review site materials, quantities, and proposed storage area to determine specific requirements. See the Flammable and Combustible Liquid Code, NFPA30.

Spills

- Contain and clean up any spill immediately.
- Properly remove and dispose of any hazardous materials or contaminated soil if significant residual materials remain on the ground after construction is complete. See WM-7, Contaminated Soil Management.
- See WM-4, Spill Prevention and Control, for spills of chemicals and/or hazardous materials.

Maintenance and Inspection:	• Verify that activity based BMPs are in place prior to the commencement of associated activities. • Inspect material storage areas during regular weekly, pre-rain event, extended event, and post rain event inspections. • Keep an ample supply of spill cleanup materials near the storage area. • Contain and clean up any spill immediately. • Keep storage areas clean, well organized. • Repair or replace perimeter controls, containment structures, covers, and liners as needed to maintain proper function.

WM-2 Material Use

Description and Purpose: This waste management and materials pollution control is implemented to prevent or reduce the discharge of pollutants to the storm drain system or watercourses from material use by using alternative products if available, and minimizing hazardous material uses onsite.

Suitable Applications

This BMP is suitable for use at all construction projects. These procedures apply when the following materials are used or prepared onsite:

- Pesticides and herbicides
- Fertilizers
- Detergents
- Petroleum products such as fuel, oil, and grease
- Asphalt and other concrete components
- Other hazardous chemicals such as acids, lime, glues, adhesives, paints, solvents, and curing compounds
- Other materials that may be detrimental if released to the environment

Implementation:

The following steps should be taken to minimize risk:

- Reduce and minimize use of hazardous materials onsite when practical.
- Follow manufacturer instructions regarding uses, protective equipment, ventilation, flammability, and mixing of chemicals. Train personnel who use pesticides. The California Department of Pesticide Regulation and county agricultural commissioner's license pesticide dealers, certify pesticide applicators, and conduct onsite inspections.
- Do not over-apply fertilizers, herbicides, and pesticides. Prepare only the amount needed.
- Follow the recommended usage instructions. Over-application is expensive and environmentally harmful. Unless on steep slopes, till fertilizers into the soil rather than hydro seeding. Apply surface dressings in several smaller applications, as opposed to one large application, to allow time for infiltration and to avoid excess material being carried offsite by runoff. Do not apply these chemicals just before it rains.
- Keep Material Safety Data Sheets (MSDS) for all materials onsite.
- Dispose of latex paint and paint cans, used brushes, rags, absorbent materials, and drop cloths, when thoroughly dry and are no longer hazardous, with other construction debris.
- Do not remove the original product label; it contains important safety and disposal information. Use the entire product before disposing of the container.
- Mix paint indoors or in a containment area. Never clean paintbrushes or rinse pain containers into a street, gutter, storm drain, or watercourse. Dispose of any paint thinners, residue, and sludge(s) that cannot be recycled, as hazardous waste.
- For water-based paint, clean brushes to the extent practicable, and rinse to a drain leading to a sanitary sewer where permitted, or into a concrete washout pit or temporary sediment trap. For oil-based paints, clean brushes to the extent practicable, and filter and reuse thinners and solvents.
- Use recycled and less hazardous products when practical. Recycle residual paints, solvents, non-treated lumber, and other materials.
- Use materials only where and when needed to complete the construction activity. Use safer alternative materials as much as possible.
- Keep an ample supply of spill clean up material near use areas.
- Avoid exposing applied materials to rainfall and runoff unless sufficient time has been allowed for them to dry.

Landscape Materials • Contain stockpiled materials such as mulches and topsoil when they are not actively being used. • Contain fertilizers and other landscape materials when they are not actively being used. • Discontinue the application of any erodible landscape material within 2 days before a forecasted rain event or during periods of precipitation. • Apply erodible landscape material at quantities and application rates according to manufacture recommendations or based on written specifications by knowledgeable and experienced field personnel. • Stack erodible landscape material on pallets and covering or storing such materials when not being used or applied.	
Maintenance and Inspection:	• Inspect work areas during regular weekly, pre-rain event, extended event, and post rain event inspections. • Maintenance of this best management practice is Minimum. • Spot check employees and subcontractors routinely throughout construction to ensure appropriate practices are being employed.

WM-3 Stockpile Management

Description and Purpose: Stockpile management procedures and practices is a waste management and materials pollution control. Stockpile Management procedures and practices are designed to reduce or eliminate air and stormwater pollution from stockpiles of soil, paving materials such as Portland cement concrete (PCC) rubble, asphalt concrete (AC), asphalt concrete rubble, aggregate base, aggregate sub base or pre-mixed aggregate, asphalt minder (so called "cold mix" asphalt), and pressure treated wood.

Suitable Applications
Implement in all projects that stockpile soil and other loose materials.

Protection of stockpiles is a year-round requirement. To properly manage stockpiles:

- Locate stockpiles a minimum of 50 feet away from concentrated flows of stormwater, drainage courses, and inlets.
- Protect all stockpiles from stormwater run on using a temporary perimeter sediment barrier such as berms, dikes, fiber rolls, silt fences, sandbag, gravel bags, or straw bale barriers.
- Implement wind erosion control practices as appropriate on all stockpiled material. For specific information, see WE-1, Wind Erosion Control.
- All stockpiles are required to be protected immediately if they are not scheduled to be used within 14 days.
- Manage stockpiles of contaminated soil in accordance with WM-7, Contaminated Soil Management.
- Place bagged materials on pallets and under cover.
- Ensure that stockpile coverings are installed securely to protect from wind and rain.
- Some plastic covers withstand weather and sunlight better than others. Select cover materials or methods based on anticipated duration of use.

Protection of Non-Active Stockpiles
Non-active stockpiles of the identified materials should be protected further as follows:

Soil stockpiles

- Soil stockpiles should be covered or protected with soil stabilization measures and a temporary perimeter sediment barrier at all times.
- Temporary vegetation should be considered for topsoil piles that will be stockpiled for extended periods.

Stockpiles of Portland cement concrete rubble, asphalt concrete, asphalt concrete rubble, aggregate base, or aggregate sub base

- Stockpiles should be covered and protected with a temporary perimeter sediment barrier at all times.

Stockpiles of "cold mix"

- Cold mix stockpiles should be placed on and covered with plastic sheeting or comparable material at all times and surrounded by a berm.

Stockpiles of fly ash, stucco, hydrated lime

- Stockpiles of materials that may raise the pH of runoff (i.e., basic materials) should be covered with plastic and surrounded by a berm.

Stockpiles/Storage of wood (Pressure treated with chromated copper arsenate or ammoniacal copper zinc arsenate

- Treated wood should be covered with plastic sheeting or comparable material at all times and surrounded by a berm.

Protection of Active Stockpiles

Active stockpiles of the identified materials should be protected as follows:

- All stockpiles should be covered and protected with a temporary linear sediment barrier prior to the onset of precipitation.
- Stockpiles of "cold mix" and treated wood, and basic materials should be placed on and covered with plastic sheeting or comparable material and surrounded by a berm prior to the onset of precipitation.
- The downstream perimeter of an active stockpile should be protected with a linear sediment barrier or berm and runoff

Maintenance and Inspection:	• Inspect treated areas during regular weekly, pre-rain, extended event, and post rain event inspections. • Repair and/or replace stockpile perimeter controls and covers as needed to keep them functioning properly. • Sediment shall be removed when sediment accumulation reaches one-third (1/3) of the barrier height

WM-4 Spill Prevention and Control

Description and Purpose: Prevent or reduce the discharge of pollutants to drainage systems or watercourses from leaks and spills by reducing the chance for spills, stopping the source of spills, containing and cleaning up spills, properly disposing of spill materials, and training employees. This best management practice covers only spill prevention and control. However, WM-1, Materials Delivery and Storage, and WM-2, Material Use, also contain useful information, particularly on spill prevention. For information on wastes, see WM-5 Liquid Waste Management and WM-10 solid Waste Management.

Suitable Applications

This BMP is suitable for all construction projects. Spill control procedures are implemented anytime chemicals or hazardous substances are stored on the construction site, including the following materials:

- Soil stabilizers/binders
- Dust palliatives
- Herbicides
- Growth inhibitors
- Fertilizers
- Deicing/anti-icing chemicals
- Fuels
- Lubricants
- Other petroleum distillates

Implementation

- To the extent that the work can be accomplished safely, spills of oil, petroleum products, and substances listed under 40 CFR parts 110, 117, and 302, and sanitary and septic wastes should be contained and cleaned up immediately.
- Store hazardous materials and wastes in covered containers and protect from vandalism.
- Place a stockpile of spill cleanup materials where it will be readily accessible.
- Train employees in spill prevention and cleanup.
- Designate responsible individuals to oversee and enforce control measures.
- Spills should be covered and protected from stormwater run-on during rainfall to the extent that it doesn't compromise clean up activities.
- Do not bury or wash spills with water.
- Store and dispose of used clean up materials, contaminated materials, and recovered spill material that is no longer suitable for the intended purpose in conformance with the provisions in applicable BMPs.
- Do not allow water used for cleaning and decontamination to enter storm drains or watercourses. Collect and dispose of contaminated water in accordance with WM-10, Liquid Waste Management.
- Contain water overflow or minor water spillage and do not allow it to discharge into drainage facilities or watercourses.
- Place proper storage, cleanup, and spill reporting instructions for hazardous materials stored or used on the project site in an open, conspicuous, and accessible location.
- Keep waste storage areas clean, well organized, and equipped with ample clean supplies as appropriate for the materials being stored. Perimeter controls, containment structures, covers, and liners should be repaired or replaced as needed to maintain proper function.

Cleanup

- Clean up leaks and spills immediately.
- Use a rag for small spills on paved surfaces, a damp mop for general cleanup, and absorbent material for larger spills. If the spilled material is hazardous, then the used cleanup materials are also hazardous and must be sent to either a certified laundry (rags) or disposed of as hazardous waste.
- Never hose down or bury dry material spills. Clean up as much of the material as possible and dispose of properly. See ***WM-5 Waste Management*** and ***WM-7 contaminated soils*** in this section for specific information.

Minor Spills

- Minor spills typically involve small quantities of oil, gasoline, paint, etc. which can be controlled at the discovery of the spill.
- Contain the spread of the spill.
- Use absorbent materials on small spills rather than hosing down or burying the spill.
- Notify the project foreman immediately
- Recover spilled materials.
- Clean the contaminated area and properly dispose of contaminated materials.
- If the spill occurs on paved or impermeable surfaces, clean up using "dry" methods (absorbent materials, cat litter and/or rags). Contain the spill by encircling with absorbent materials and do not let the spill spread widely.
- If the spill occurs in dirt areas, immediately contain the spill by constructing an earthen dike. Dig up and properly dispose of contaminated soil.
- If the spill occurs during rain, cover spill with tarps or other material to prevent contaminating runoff.

Semi-Significant Spills

- Semi-significant spills still can be controlled by the first responder along with the aid of other personnel such as laborers and the foreman, etc. This response may require the cessation of all other activities. Spills should be cleaned up immediately:

Significant/Hazardous Spills

- For significant or hazardous spills that cannot be controlled by personnel in the immediate vicinity, the following steps should be taken:
  - Notify the local emergency response by dialing 911. In addition to 911, the contractor will notify the proper City or County officials. All emergency phone numbers will be posted at the construction site.
  - Contact your Supervisor and the Divisional Environmental Manager. For spills of federal reportable quantities, (examples are listed below) in conformance with the requirements in 40 CFR parts 110,119, and 302, the Division Environmental Manager (DEM) will notify the National Response Center at (800) 424-8802. The DEM will notify the Regional Water Quality Control Board and any other applicable agencies
- The services of a spills contractor or a Haz-Mat team should be obtained immediately. Construction personnel should not attempt to clean up until the appropriate and qualified staffs have arrived at the job site.
- Notification should first be made by telephone and followed up with a written report.
- Other agencies which may need to be consulted include, but are not limited to, the Public Works Department, the Coast Guard, the Highway Patrol, the City/County Police Department, Department of Toxic Substances, California Division of Oil and Gas, Cal/OSHA, etc.
  - Federal regulations require that any significant oil spill into a water body or onto an adjoining shoreline be reported to the National Response Center (NRC) at 800-424-8802 (24 hours).

Sampling

- If there is evidence that the spilled material was discharged offsite, follow the appropriate sampling protocol (stormwater, non-stormwater or non-visible discharges) located in the CSMP.

Use the following measures related to specific activities:

Vehicle and Equipment Maintenance

- If maintenance must be performed onsite, use a designated area and secondary containment, located away from drainage courses, to prevent the run on of stormwater and the runoff of spills.
- Regularly inspect onsite vehicles and equipment for leaks and repair immediately
- Check incoming vehicles and equipment (including delivery trucks, and employee and subcontractor vehicles) for leaking oil and fluids. Do not allow leaking vehicles or equipment onsite.
- Always use secondary containment, such as a drain pan or drop cloth, to catch spills or leaks when removing or changing fluids.
- Place drip pans or absorbent materials under paving equipment when not in use.
- Use absorbent materials on small spills rather than hosing down or burying the spill.
- Remove the absorbent materials promptly and dispose of properly.
- Promptly transfer used fluids to the proper waste or recycling drums. Don't leave full drip pans or other open containers lying around.
- Oil filters disposed of in trashcans or dumpsters can leak oil and pollute stormwater. Place the oil filter in a funnel over a waste oil-recycling drum to drain excess oil before disposal. Oil filters can also be recycled. Ask the oil supplier or recycler about recycling oil filters.
- Store cracked batteries in a non-leaking secondary container. Do this with all cracked batteries even if you think all the acid has drained out. If you drop a battery, treat it as if it is cracked. Put it into the containment area until you are sure it is not leaking.

Vehicle and Equipment Fueling

- If fueling must be performed onsite, designate areas located away from drainage courses to prevent the run on of stormwater and the runoff of spills.
- Discourage "topping off" of fuel tanks.
- Always use secondary containment, such as a drain pan, when fueling to catch spills/ leaks.

Typical Reportable Quantities for Construction Sites

Material	Released To	Quantity
Engine Oil, Fuel Hydraulic & Brake Fluid	Land	25 gallons
Engine Oil, Fuel Hydraulic & Brake Fluid	Water	Visible Sheen
Gasoline	Land, Water	32 gallons
Anti-Freeze	Land or Water	5000 lbs (539 gallons)
Engine Degreaser	Land or Water	100 lbs (10 gallons)

Inspection and Maintenance

- Verify that activity–based BMPs are in place prior to the commencement of associated activities. While activities associated with the BMP are under way, inspect according to enclosed CSMP.
- Observe BMPs subject to non-stormwater discharge while non-stormwater discharges occur as part of routine activities.
- Keep ample supplies of spill control and cleanup materials onsite, near storage, unloading, and maintenance areas.
- Update your spill prevention and control plan and stock cleanup materials as changes occur in the types of chemicals onsite.

WM-5 Solid Waste Management

Description and Purpose: Solid waste management procedures and practices are a waste management and pollution control designed to prevent or reduce the discharge of pollutants to stormwater from solid or construction waste by providing designated waste collection areas and containers, arranging for regular disposal, and training employees and subcontractors.

Limitations

Temporary stockpiling of certain construction wastes may not necessitate stringent drainage related controls during the non-rainy season or in desert areas with low rainfall.

Implementation

- Inform trash-hauling contractors that you will accept only watertight dumpsters for onsite use. Inspect dumpsters for leaks and repair any dumpster that is not watertight.
- Provide an adequate number of containers for the amount of trash that will be generated from the site with lids or covers that can be placed over the container to keep rain out or to prevent loss of wastes when it is windy.
- Trash receptacles should be provided in the contractor's yard, field trailer areas, and at locations where workers congregate for lunch and break periods.
- Solid waste storage areas should be located away from drainage facilities and watercourses and should not be located in areas prone to flooding or ponding.
- Stormwater run-on should be prevented from contacting stored solid waste through the use of berms, dikes, or other temporary diversion structures or through the use of measures to elevate waste from site surfaces.
- Collect site trash daily, especially during rainy and windy conditions and cover receptacles at the end of each business day or while not in use.
- Collected litter and debris should not be stored next to inlets, drainage systems, or watercourses.
- Waste containers, dumpsters, & trash receptacles must be covered at the end of the work day and in the event of rain or significant wind.
- Arrange for regular waste collection before containers overflow.
- To prevent clogging of the storm drainage system, litter and debris removal from drainage grates, trash racks, and ditch lines should be a priority.
- Segregate potentially hazardous waste from non-hazardous construction site waste.
- Make sure that toxic liquid wastes (used oils, solvents, and paints) and chemicals (acids, pesticides, additives, curing compounds) are not disposed of in dumpsters designated for construction debris.
- Do not hose out dumpsters on the construction site. Leave dumpster cleaning to the trash hauling contractor.
- Clean up immediately if a container does spill.
- Make sure that construction waste is collected, removed, and disposed of only at authorized disposal facilities.
- Littering on the project site is prohibited.

Maintenance and Inspection:	• Verify that activity–based BMPs are in place prior to the commencement of associated activities. • Inspect waste storage and disposal areas during regular weekly, pre-rain event, extended event, and post rain event inspections. • Observe conditions at the site while non-stormwater discharges occur as a part of routine activities. • Arrange for regular waste collection.

WM-6 Hazardous Waste Management

Description and Purpose This hazardous waste management measure is a waste management and pollution control measure that applies to all construction projects to prevent or reduce the discharge of pollutants to stormwater from hazardous waste through proper material use, waste disposal, and training of associates and subcontractors.

Suitable Applications
Hazardous waste management practices are implemented on construction projects that generate waste from the use of:

- Petroleum Products, Asphalt Products, Concrete Curing Compounds, Pesticides, Palliatives, Acids, Septic Wastes, Paints, Stains, Solvents, Wood Preservatives, Roofing Tar and any materials deemed a hazardous waste in California, Title 22 Division 4.5, or listed in 40 CFR Parts 110, 117, 261, or 302.

In addition, sites with existing structures may contain wastes, which must be disposed of in accordance with federal, state, and local regulations. These wastes include:

- Sandblasting grit mixed with lead-, cadmium-, or chromium-based paints
- Asbestos
- PCBs (particularly in older transformers)

Implementation

- Wastes should be stored in sealed containers constructed of a suitable material and should be labeled as required by Title 22 CCR, Division 4.5 and 49 CFR Parts 172, 173, 178, and 179.
- All hazardous waste should be stored, transported, and disposed as required in Title 22 CCR, Division 4.5 and 49 CFR 261-263.
- Waste containers should be stored in temporary containment facilities that should comply with the following requirements:
    - Designate hazardous waste storage areas onsite away from storm drains or watercourses and away from moving vehicles and equipment to prevent accidental spills.
    - Minimize production or generation of hazardous materials and hazardous waste on the job site.
    - Use containment berms in fueling and maintenance areas and where the potential for spills is high.
    - Segregate potentially hazardous waste from non-hazardous construction site debris.
    - Keep liquid or semi-liquid hazardous waste in appropriate containers (closed drums or similar) and under cover.
    - Temporary containment facility should provide for a spill containment volume equal to 1.5 times the volume of all containers able to contain precipitation from a 25 year storm event, plus the greater of 10% of the aggregate volume of all containers or 100% of the capacity of the largest tank within its boundary, whichever is greater.
    - Temporary containment facility should be impervious to the materials stored there for a minimum contact time of 72 hours.
    - Temporary containment facilities should be maintained free of accumulated rainwater and spills. In the event of spills or leaks, accumulated rainwater and spills should be placed into drums after each rainfall. These liquids should be handled as a hazardous waste unless testing determines them to be non-hazardous. Non-hazardous liquids should be sent to an approved disposal site.
    - Sufficient separation should be provided between stored containers to allow for spill cleanup and emergency response access.

- Incompatible materials, such as chlorine and ammonia, should not be stored in the same temporary containment facility.
- Throughout the rainy season, temporary containment facilities should be covered during non-working days, and prior to rain events. Covered facilities may include use of plastic tarps for small facilities or constructed roofs with overhangs.
- Drums should not be overfilled and wastes should not be mixed.
- Unless watertight, containers of dry waste should be stored on pallets.

- Do not over-apply herbicides and pesticides. Prepare only the amount needed. Follow the recommended usage instructions. Over application is expensive and environmentally harmful. Apply surface dressings in several smaller applications, as opposed to one large application. Allow time for infiltration and avoid excess material being carried offsite by runoff. Do not apply these chemicals just before it rains. Personnel applying pesticides must be certified in accordance with federal and state regulations.
- Paint brushes and equipment for water and oil based paints should be cleaned within a contained area and should not be allowed to contaminate site soils, watercourses, or drainage systems. Waste paints, thinners, solvents, residues, and sludges that cannot be recycled or reused should be disposed of as hazardous waste. When thoroughly dry, latex paint and paint cans, used brushes, rags, absorbent materials, and drop cloths should be disposed of as solid waste.
- Do not clean out brushes or rinse paint containers into the soil, street, gutter, storm drain, or stream. "Paint out" brushes as much as possible. Rinse water-based paints to the sanitary sewer. Filter and reuse thinners and solvents. Dispose of excess oil-based paints and sludge as hazardous waste.
- Clearly label all hazardous waste containers with the waste being stored and the date of accumulation.
  - Place hazardous waste containers in secondary containment.
  - Do not allow potentially hazardous waste materials to accumulate on the ground.
  - Do not mix wastes.
  - Use the entire product before disposing of the container.
  - Do not remove the original product label; it contains important safety and disposal information.

Waste Recycling Disposal

- Select designated hazardous waste collection areas onsite.
- Hazardous materials and wastes should be stored in covered containers and protected from vandalism.
- Place hazardous waste containers in secondary containment.
- Do not mix wastes, this can cause chemical reactions, making recycling impossible and complicating disposal.
- Recycle any useful materials such as used oil or water-based paint.
- Make sure that toxic liquid wastes (used oils, solvents, and paints) and chemicals (acids, pesticides, additives, curing compounds) are not disposed of in dumpsters designated for construction debris.
- Arrange for regular waste collection before containers overflow.
- Make sure that hazardous waste (e.g., excess oil-based paint and sludge) is collected, removed, and disposed of only at authorized disposal areas.

Disposal Procedures

- Waste should be disposed of by a licensed hazardous waste transporter at an authorized and licensed disposal facility or recycling facility utilizing properly completed Uniform Hazardous Waste Manifest forms.
- A Department of Health Services certified laboratory should sample waste to determine the appropriate disposal facility.

• Properly dispose of rainwater in secondary containment that may have mixed with hazardous waste. • Attention is directed to "Hazardous Material", "Contaminated Material", and "Aerially Deposited Lead" of the contract documents regarding the handling and disposal of hazardous materials. • Place a stockpile of spill cleanup materials where it will be readily accessible. • If a container does spill, clean up immediately **Education** • The QSP will oversee and enforce proper hazardous waste management procedures and practices. • Warning signs should be placed in areas recently treated with chemicals.	
Maintenance and Inspection:	• Verify that activity–based BMPs are in place prior to the commencement of associated activities. • Inspect containment and storage areas during regular weekly, pre-rain event, extended event, and post rain event inspections. • Observe BMPs subject to non-stormwater discharge while non-stormwater discharges occur as part of routine activities. • Hazardous waste should be regularly collected. • Waste storage areas should be kept clean, well organized, and equipped with ample cleanup supplies as appropriate for the materials being stored. • Perimeter controls, containment structures, covers, and liners should be repaired or replaced as needed to maintain proper function. • Hazardous spills should be cleaned up and reported in conformance with the applicable Material Safety Data Sheet (MSDS) and the instructions posted at the project site. • The National Response Center, at (800) 424-8802, should be notified of spills of federal reportable quantities in conformance with the requirements in 40 CFR parts 110, 117 see WM-4 Spill Prevention and Control. • A copy of the hazardous waste manifests should be provided.

WM-7 Contaminated Soils

Description and Purpose: This waste management and materials pollution control is used to prevent or reduce the discharge of pollutants to stormwater from contaminated soil and highly acidic or alkaline soils by conducting pre-construction surveys, inspecting excavations regularly, and remediate contaminated soil promptly.

Suitable Applications
Contaminated soil management is implemented on construction projects in highly urbanized or industrial areas where soil contamination may have occurred due to spills, illicit discharges, aerial deposition, past use and leaks from underground storage tanks.

Limitations
Contaminated soils that cannot be treated onsite must be disposed of offsite by a licensed hazardous waste hauler. The presence of contaminated soil may indicate contaminated water as well. See NS-2, Dewatering Operations, for more information.

The procedures and practices presented in this BMP are general. Personnel trained in contaminated soils management should be contracted to manage the remediation of contaminated soils. They will identify appropriate practices and procedures for the remediation of specific contaminants known to exist or discovered onsite.

Implementation
Contaminated soils are often identified during project planning and development with known locations identified in the plans, specifications and in the SWPPP. Applicable reports should be reviewed and investigate appropriate call-outs in the plans, specifications, and SWPPP.

The following steps will help reduce stormwater pollution from contaminated soil:

- Conduct thorough, pre-construction inspections of the site and review documents related to the site. If inspection or reviews indicated presence of contaminated soils, develop a plan before starting work.
- Look for contaminated soil as evidenced by discoloration, odors, differences in soil properties, abandoned underground tanks or pipes, or buried debris.
- Prevent leaks and spills. Contaminated soil can be expensive to treat and dispose of properly. However, addressing the problem before construction is much less expensive than after the structures are in place.
- Suspected soils should be tested at a certified laboratory.

Handling Procedures for Contaminated Soils

- Minimize onsite storage. Contaminated soil should be disposed of properly in accordance with all applicable regulations. All hazardous waste storage will comply with the requirements in Title 22, CCR, Sections 66265.250 to 66265.260.
- Test suspected soils at an approved certified laboratory.
- Work with the local regulatory agencies to develop options for treatment or disposal if the soil is contaminated.
- Avoid temporary stockpiling of contaminated soils or hazardous material.
- Take the following precautions if temporary stockpiling is necessary:
    - Cover the stockpile with plastic sheeting or tarps.
    - Install a berm around the stockpile to prevent runoff from leaving the area.
    - Do not stockpile in or near storm drains or watercourses.

- Remove contaminated material and hazardous material on exteriors of transport vehicles and place either into the current transport vehicle or into the excavation prior to the vehicle leaving the exclusion zone.
- Comply with federal, state, or local agency requirements for monitoring the air quality during excavation operations at all locations containing hazardous material.
- Procure all permits and licenses, pay all charges and fees, and give all notices necessary and incident to the due and lawful prosecution of the work, including registration for transporting vehicles carrying the contaminated material and the hazardous material.
- Collect water from decontamination procedures and treat or dispose of it at an appropriate disposal site.
- Collect non-reusable protective equipment, once used by any personnel, and dispose of at an appropriate disposal site.
- Install temporary security fence to surround and secure the exclusion zone. Remove fencing when no longer needed.
- Excavate, transport, and dispose of contaminated material and hazardous material in accordance with the rules and regulations of the following agencies (the specifications of these agencies supersede the procedures outlined in this BMP):
    - United States Department of Transportation (USDOT)
    - United States Environmental Protection Agency (USEPA)
    - California Environmental Protection Agency (CAL-EPA)
    - California Division of Occupation Safety and Health Administration (CAL-OSHA)
    - Local regulatory agencies
- Caution should be exercised to prevent spillage of material during transport.

Procedures for Underground Storage Tank Removals

- Prior to commencing tank removal operations, obtain the required underground storage tank removal permits and approval from the federal, state, and local agencies that have jurisdiction over such work.
- To determine if it contains hazardous substances, arrange for testing of any liquid or sludge found in the underground tank prior to its removal.
- Remove the tank per the agency approved work plan or tank removal specifications.
- Following the tank removal, take soil samples beneath the excavated tank and perform analysis as required by the local agency representative(s).
- Dispose of the underground storage tank, any liquid or sludge found within the tank, and all contaminated substances and hazardous substances removed during the tank removal to disposal facilities permitted to accept such waste. Obtain and retain manifests for hazardous waste transport and disposal

Water Control

- All necessary precautions and preventive measures should be taken to prevent the flow of water, including groundwater, from mixing with hazardous substances or underground storage tank excavations. Such preventative measures may consist of, but are not limited to, berms, cofferdams, grout curtains, freeze walls, and seal course concrete or any combination thereof.
- If water does enter an excavation and becomes contaminated, such water, when necessary to proceed with the work, should be discharged to clean, closed top, watertight transportable holding tanks, treated or disposed of in accordance with federal, state, and local laws.

Maintenance and Inspection:	• Verify that activity based BMPs are in place prior to the commencement of associated activities. • Inspect contaminated soil areas while work is underway in those areas during regular weekly, pre-rain, extended event, and post rain event inspections. • Monitor onsite contaminated soil storage and disposal procedures. • Monitor air quality continuously during contaminated soil excavation operations at all locations containing hazardous material. • Coordinate contaminated soils and hazardous substances/waste management with the appropriate federal, state, and local agencies.

WM-8A Concrete Waste Management (Above Grade CWO)

Description and Purpose: The use of concrete waste management measures including, concrete washouts (CWO), are waste management and pollution controls that prevent or reduce the discharge of pollutants to stormwater from concrete waste products by conducting washout offsite or onsite in a designated area.

Suitable Applications

Concrete waste management procedures and practices are implemented on construction projects where:

- Concrete is used as a construction material or where concrete dust and debris result from demolition activities
- Slurries containing Portland cement concrete (PCC) or asphalt concrete (AC) are generated, such as from saw cutting, coring, grinding, grooving, and hydro-concrete demolition
- Concrete trucks and other concrete-coated equipment are washed onsite
- Mortar-mixing stations

Implementation

- Place out of traffic patterns and downstream and far as possible from storm drains, open ditches, and water bodies.
- Place in a location that allows convenient access for concrete trucks, preferably near the area where the concrete is being poured.
- Appropriate gravel or rock should cover entry paths to concrete washout facilities if the facilities are located on undeveloped property.
- The number of facilities you install should depend on the expected demand for storage capacity.
- A sign should be installed adjacent to each washout facility to identify it as a concrete washout location.
- Store dry and wet raw materials under cover, away from drainage areas.
- Avoid mixing excess amounts of fresh concrete.
- Do not wash out concrete trucks into storm drains, open ditches, streets, or streams.
- Do not allow excess concrete to be dumped onsite, except in designated areas.
- Clean all spills onto the soils or other surfaces immediately per the spill response plan.
- Do not wash tailings/wash waters from exposed aggregate concrete into the street or storm drain.
- Collect and return tailings/wash waters to aggregate base stockpile or dispose in the trash.
- For onsite washout:
    - Avoid creating runoff by draining water to a bermed or level area when washing concrete to remove fine particles and expose the aggregate.
    - Temporary Concrete Washout Facility (Above-Grade Design)
        - Should be constructed as shown on the following details, with a recommended minimum length and minimum width of 10 ft.
        - Plastic liner material should be a minimum of 10-mil polyethylene sheeting and be free of holes, tears, or other defects that compromise the impermeability of the material.

Concrete Slurry Wastes

- Residue from grinding operations should be picked up by means of a vacuum attachment
- Saw cutting residue should not be allowed to flow across the pavement and should not be left on the surface of the pavement. See also Paving and Grinding, Operations.
- Slurry residue should be vacuumed and disposed in a temporary pit. Dispose of dry slurry residue in accordance with *Solid Waste Management*.

Removal of Temporary Concrete Washout Facilities • Hardened concrete should be removed and disposed of. • Materials used to construct temporary concrete washout facilities should be removed from the site and properly disposed. • Holes, depressions or other ground disturbance caused by the removal of the temporary concrete washout facilities should be backfilled and repaired.	
Maintenance and Inspection:	• Verify that activity–based BMPs are in place prior to the commencement of associated activities. • Inspect washouts during regular weekly, pre-rain, extended event, and post rain event inspections. • Temporary concrete washout facilities should be maintained to provide adequate holding capacity with a minimum freeboard of 4 inches for above grade facilities. • Hardened concrete materials should be removed and disposed of. • Washout facilities must be cleaned, or new facilities must be constructed and ready for use once the washout is 75% full.

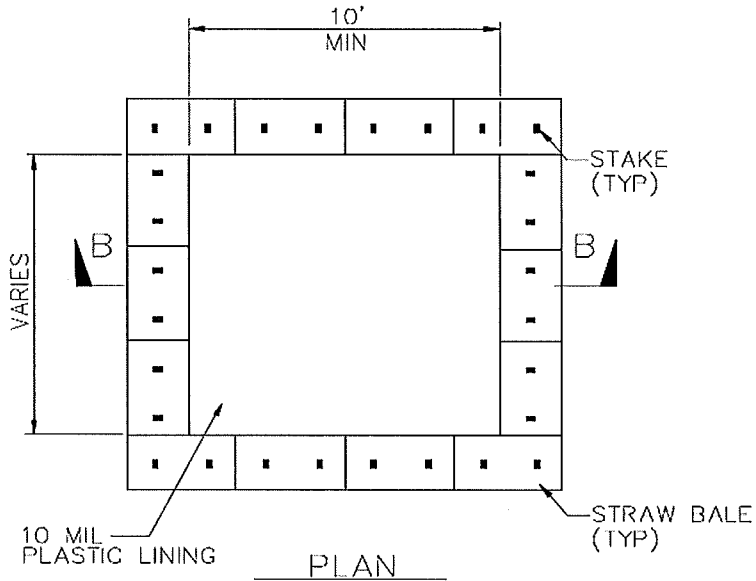

PLAN
NOT TO SCALE
TYPE "ABOVE GRADE"
WITH STRAW BALES

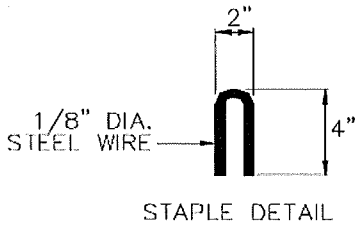

STAPLE DETAIL

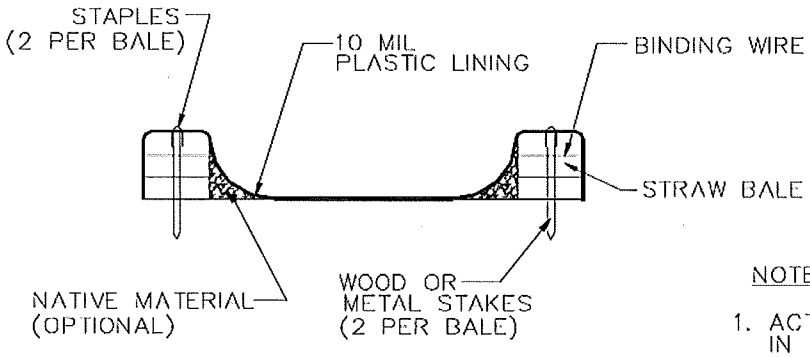

SECTION B–B
NOT TO SCALE

NOTES

1. ACTUAL LAYOUT DETERMINED IN FIELD.
2. THE CONCRETE WASHOUT SIGN SHALL BE INSTALLED WITHIN 30 FT. OF THE TEMPORARY CONCRETE WASHOUT FACILITY.

WM-8C Concrete Waste Management (Prefab CWO)

Description and Purpose: The use of concrete waste management measures including, concrete washouts (CWO), are waste management and pollution controls that prevent or reduce the discharge of pollutants to stormwater from concrete waste products by conducting washout offsite or onsite in a designated area.

Suitable Applications

Concrete waste management procedures and practices are implemented on construction projects where:

- Concrete is used as a construction material or where concrete dust and debris result from demolition activities
- Slurries containing Portland cement concrete (PCC) or asphalt concrete (AC) are generated, such as from saw cutting, coring, grinding, grooving, and hydro-concrete demolition
- Concrete trucks and other concrete-coated equipment are washed onsite
- Mortar-mixing stations

Implementation

- The concrete washout shall consist of a commercial roll off bin with a water tight gate and access ramps as necessary to accommodate access by concrete trucks.
- Arrange for pumping of accumulated slurry/water when capacity is 75%
- Place downstream and far as possible from storm drains, open ditches, or water bodies.
- Place in a location that allows convenient access for concrete trucks, preferably near the area where the concrete is being poured.
- Appropriate gravel or rock should cover paths to concrete washout facilities if the facilities are located on undeveloped property.
- Place far enough away from other construction traffic to reduce the likelihood of accidental damage and spills.
- The number of facilities you install should depend on the expected demand for storage capacity.
- A sign should be installed adjacent to each washout facility
- To prevent leaks on the jobsite, ensure that prefabricated washout containers are watertight.
- Store dry and wet materials under cover, away from drainage areas.
- Avoid mixing excess amounts of fresh concrete.
- The quantity and volume should be sufficient to contain all liquid and concrete waste generated by washout operations
- Perform washout of concrete trucks offsite or in designated areas only.
- Do not wash out concrete trucks onto the soils, into storm drains, open ditches, streets, or streams.
- Do not allow excess concrete to be dumped onsite, except in designated areas.
- Clean all spills onto the soils or other surfaces immediately as per the spill response plan
- Do not wash sweepings from exposed aggregate concrete into the street or storm drain.
- Wash out wastes into the prefabricated facility where the concrete can set, be broken up, and then disposed properly.
- Collect and return sweepings to aggregate base stockpile or dispose in the trash.
- Provide careful oversight to inspect for evidence of improper dumping of concrete waste and wash water.

Concrete Slurry Wastes.

- Residue from grinding operations should be picked up by means of a vacuum attachment
- Saw cutting residue should not be allowed to flow across the pavement and should not be left on the surface of the pavement. See also Paving and Grinding, Operations NS-3.

• Slurry residue should be vacuumed and disposed in a temporary pit Dispose of dry slurry residue in accordance with Solid Waste Management WM-5.	
Maintenance and Inspection:	• Verify that activity–based BMPs are in place prior to the commencement of associated activities. • Inspect washouts during regular weekly, pre-rain, extended event, and post rain event inspections. • Temporary concrete washout facilities should be maintained to provide adequate holding capacity with a minimum freeboard of 4 inches for above grade facilities. • Hardened concrete materials should be removed and disposed of. • Washout facilities must be cleaned, or new facilities must be constructed and ready for use once the washout is 75% full.

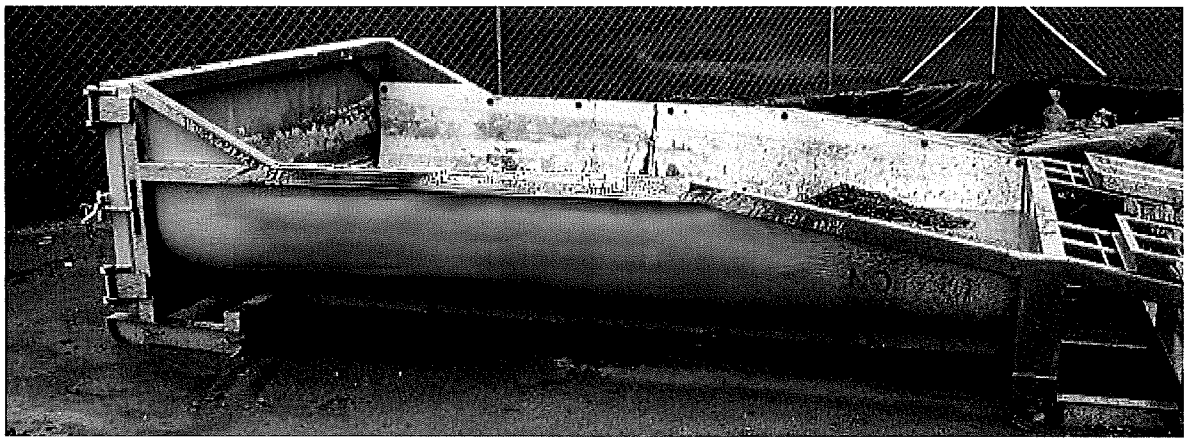

WM-9 Sanitary Facilities

Description and Purpose: Proper sanitary and septic waste management are waste management and material pollution controls that prevent the discharge of pollutants to stormwater from sanitary and septic waste by providing convenient, well-maintained facilities, an arranging for regular service and disposal.

Suitable Applications
Sanitary septic waste management practices are suitable for use at all construction sites that use temporary or portable sanitary and septic waste systems.

Implementation

- Should be located away from drainage facilities, watercourses, and from traffic circulation.
- Provide a sufficient quantity of facilities to accommodate the workforce.
- Ensure containment of sanitation facilities to prevent discharge of pollutants to the stormwater drainage system or the receiving water.
- When subjected to high winds or risk of high winds, temporary sanitary facilities should be secured to prevent overturning.
- Sanitary facilities should be located in a convenient location.
- Sanitary or septic wastes should be treated or disposed of in accordance with state and local requirements.
- Sanitary facilities should be maintained in good working order by a licensed service.
- Regular waste collection by a licensed hauler should be arranged before facilities overflow.
- Do not discharge or bury sanitary waste within the project site.
- Sanitary and septic systems that discharge directly into sanitary sewer systems, where permissible, should comply with the local health agency, city, county, and sewer district requirements.
- Temporary septic systems should treat wastes to appropriate levels before discharging.
- If using an onsite disposal system (OSDS), such as a septic system, local health agency requirements must be followed.
- Sanitary and septic facilities should be maintained in good working order by a licensed service.

Maintenance and Inspection:	• Verify that activity–based BMPs are in place prior to the commencement of associated activities. • Inspect during regular weekly, pre-rain, extended event, and post rain event inspections. • Arrange for regular waste collection. • If high winds are expected, portable sanitary facilities must be secured with spikes or weighed down to prevent over turning.

WM-10 Liquid Waste Management

Description and Purpose: Liquid waste management is a waste management and materials pollution control that includes procedures and practices to prevent discharge of pollutants to the storm drain system or to watercourses as a result of the creation, collection, and disposal of non-hazardous liquid wastes.

Suitable Applications

Liquid waste management is applicable to construction projects that generate any of the following non-hazardous by-products, residuals, or wastes:

- Drilling slurries and drilling fluids.
- Grease-free and oil-free wastewater and rinse water.
- Dredgings.
- Other non-stormwater liquid discharges not permitted by separate permits.

Limitations

- Disposal of some liquid wastes may be subject to specific laws and regulations or to requirements of other permits secured for the construction project (e.g., NPDES permits, Army Corps permits, Coastal Commission permits, etc.).
- Liquid waste management does not apply to dewatering operations (NS-2, Dewatering Operations), solid waste management (WM-5, Solid Waste Management), hazardous wastes (WM-6, Hazardous Waste Management), or concrete slurry residue (WM-8, Concrete Waste Management).
- Typical permitted non-stormwater discharges can include: water line flushing; landscape irrigation; diverted stream flows; rising ground waters; uncontaminated pumped ground water; discharges from potable water sources; foundation drains; irrigation water; springs; water from crawl space pumps; footing drains; lawn watering; flows from riparian habitats and wetlands; and discharges or flows from emergency firefighting activities.

Implementation

Containing Liquid Wastes

- Drilling residue and drilling fluids should not be allowed to enter storm drains and watercourses and should be disposed of.
- If an appropriate location is available, drilling residue and drilling fluids that are exempt under Title 23, CCR § 2511(g) may be dried by infiltration and evaporation in a containment facility constructed in conformance with the provisions concerning the Temporary Concrete Washout Facilities detailed in WM-8, Concrete Waste Management.
- Liquid wastes generated as part of an operational procedure, such as water-laden dredge material and drilling mud, should be contained and not allowed to flow into drainage channels or receiving waters prior to treatment.
- Liquid wastes should be contained in a controlled area such as a holding pit, sediment basin roll-off bin, or portable tank.
- Containment devices must be structurally sound and leak free.
- Containment devices must be of sufficient quantity or volume to completely contain the liquid wastes generated.

Capturing Liquid Wastes

- Capture all liquid wastes that have the potential to affect the storm drainage system (such as wash water and rinse water from cleaning walls or pavement), before they run off a surface.
- Do not allow liquid wastes to flow or discharge uncontrolled. Use temporary dikes or berms to intercept flows and direct them to a containment area or device for capture.

• Use a sediment trap (SE-3, Sediment Trap) for capturing and treating sediment laden liquid waste or capture in a containment device and allow sediment to settle. ***Disposing of Liquid Wastes*** • A typical method to handle liquid waste is to dewater the contained liquid waste, using procedures such as described in NS-2, Dewatering Operations, and SE-2, Sediment Basin, and dispose of resulting solids per WM-5, Solid Waste Management. • Methods of disposal for some liquid wastes may be prescribed in Water Quality Reports, NPDES permits, Environmental Impact Reports, 401 or 404 permits, and local agency discharge permits, etc. Review the SWPPP to see if disposal methods are identified. • Liquid wastes, such as from dredged material, may require testing and certification whether it is hazardous or not before a disposal method can be determined. • For disposal of hazardous waste, see WM-6, Hazardous Waste Management. • If necessary, further treat liquid wastes prior to disposal. Treatment may include, though is not limited to, sedimentation, filtration, and chemical neutralization.	
Maintenance and Inspection:	• Inspect and verify that activity–based BMPs are in place prior to the commencement of associated activities. • Inspect areas where concrete finishing is taking place during regular weekly, pre-rain event, extended event, and post rain event inspections. • Routinely observe BMPs subject to non-stormwater discharge while non-stormwater discharges occur • Remove deposited solids in containment areas and capturing devices as needed and at the completion of the task. Dispose of any solids as described in WM-5, Solid Waste Management. • Inspect containment areas and capturing devices and repair as needed.

NS-1 Water Conservation Practices

Description and Purpose: Water conservation practices are a non stormwater discharge management measure that consists of activities that use water during the construction of a project in a manner that avoids causing erosion and the transport of pollutants offsite. These practices can reduce or eliminate non-stormwater discharges.

Suitable Applications
Water conservation practices are suitable for all construction sites where water is used, including piped water, metered water, trucked water, and water from a reservoir.

Generally:

- Keep water equipment in good working condition.
- Stabilize water truck filling area.
- Repair water leaks promptly.
- Use nozzles on hoses that shut off when not in use.
- Washing of vehicles and equipment on the construction site is prohibited unless an emergency.
- Avoid using water to clean construction areas. If water must be used for cleaning or surface preparation, surface should be swept and vacuumed first to remove dirt. This will minimize amount of water required.
- Direct construction water runoff to areas where it can soak into the ground or be collected and reused.
- Authorized non-stormwater discharges to the storm drain system, channels, or receiving waters are acceptable with the implementation of appropriate BMPs.
- Lock water tank valves to prevent unauthorized use.
- Install sediment and erosion control measures as needed if there is the potential to cause erosion or scour.

Maintenance and Inspection:	• Verify that BMPs are in place prior to the commencement of activities that may cause a non stormwater discharge.
	• Observe non-stormwater BMPs as a part of routine activities.
	• Repair water equipment as needed to prevent unintended discharges.
	  o Water trucks
	  o Water reservoirs (water buffalos)
	  o Irrigation systems
	  o Hydrant connection

NS-2 Dewatering Operations

Description and Purpose:

Dewatering operations are practices that manage the discharge of pollutants when non-stormwater and accumulated precipitation must be removed from a work location so that construction work may be accomplished. Non-stormwater includes, but is not limited to, groundwater, water from cofferdams, water diversions, and waters used during construction activities that must be removed from a work area.

Suitable Applications

These practices are implemented for discharges of non stormwater from construction sites. Non-stormwaters include, but are not limited to, groundwater, water from cofferdams, water diversions, and waters used during construction activities that must be removed from a work area to facilitate construction. Practices identified in this section are also appropriate for implementation when managing the removal of accumulated precipitation (stormwater) from depressed areas at a construction site. Stormwater mixed with non-stormwater should be managed as non-stormwater.

Implementation:

- The contractor must apply for a Wastewater Batch Discharge Permit from SFPUC WWE/CSD prior to any discharge to the City's Sewer System. This includes stormwater that is co-mingled with groundwater or other non-stormwater sources. Once the discharge is allowed, appropriate BMPs must be implemented to ensure the discharge complies with all permit requirements and regional and watershed specific requirements.
- The QSP will coordinate monitoring and permit compliance.
- Additional permits or permissions from other agencies may be required for dewatering cofferdams or diversions.
- Dewatering discharges must not cause erosion at the discharge point.
- All dewatering activity must conform to Chapter III, Environmental Settling, Impacts and Mitigation Measures of the Draft EIR, Section III.M Hydrology and Water Quality.

A variety of methods can be used to treat water during dewatering operations. Several devices are presented below and provide options to achieve sediment removal. The size of particles present in the sediment and Permit or receiving water limitations on sediment are key considerations for selecting sediment treatment option(s); in some cases, the use of multiple devices may be appropriate.

See: SE2-Sediment Basin, SE-3 Temporary Sediment Trap

Additional options:

Weir Tanks

Description:

- A weir tank separates water and waste by using weirs. The configuration of the weirs (over and under weirs) maximizes the residence time in the tank and determines the waste to be removed from the water, such as oil, grease, and sediments.

Appropriate Applications:

- The tank removes trash, some settleable solids (gravel, sand, and silt), some visible oil and grease, and some metals (removed with sediment). To achieve high levels of flow, multiple tanks can be used in parallel. If additional treatment is desired, the tanks can be placed in series or as pre-treatment for other methods.

Implementation:

- Tanks are delivered to the site by the vendor, who can provide assistance with set-up and operation.
- Tank size will depend on flow volume, constituents of concern, and residency period required. Vendors should be consulted to appropriately size tank.

Maintenance:

- Periodic cleaning is required based on visual inspection or reduced flow.
- Oil and grease disposal must be by licensed waste disposal company.

Dewatering Tanks

Description:

- A dewatering tank removes debris and sediment. Flow enters the tank through the top, passes through a fabric filter, and is discharged through the bottom of the tank. The filter separates the solids from the liquids.

Appropriate Applications:

- The tank removes trash, gravel, sand, and silt, some visible oil and grease, and some metals (removed with sediment). To achieve high levels of flow, multiple tanks can be used in parallel. If additional treatment is desired, the tanks can be placed in series or as pretreatment for other methods.

Implementation:

- Tanks are delivered to the site by the vendor, who can provide assistance with set-up and operation.
- Tank size will depend on flow volume, constituents of concern, and residency period required. Vendors should be consulted to appropriately size tank.

Maintenance:

- Periodic cleaning is required based on visual inspection or reduced flow.
- Oil and grease disposal must be by licensed waste disposal company.

Gravity Bag Filter

Description:

- A gravity bag filter, also referred to as a dewatering bag, is a square or rectangular bag made of non-woven geotextile fabric that collects sand, silt, and fines.

Appropriate Applications:

- Effective for the removal of sediments (gravel, sand, and silt). Some metals are removed with the sediment.

Implementation:

- Water is pumped into one side of the bag and seeps through the bottom and sides of the bag.
- A secondary barrier, such as a rock filter bed or straw/hay bale barrier, is placed beneath and beyond the edges of the bag to capture sediments that escape the bag.

Maintenance:

- Inspection of the flow conditions, bag condition, bag capacity, and the secondary barrier is required.
- Replace the bag when it no longer filters sediment or passes water at a reasonable rate.
- The bag is disposed of offsite.

Sand Media Particulate Filter

Description:

- Water is treated by passing it through canisters filled with sand media. Generally, sand filters provide a final level of treatment. They are often used as a secondary or higher level of treatment after a significant amount of sediment and other pollutants have been removed using other methods.

Appropriate Applications:

- Effective for the removal of trash, gravel, sand, and silt and some metals, as well as the reduction of biochemical oxygen demand (BOD) and turbidity.
- Sand filters can be used for stand-alone treatment or in conjunction with bag and cartridge filtration if further treatment is required.
- Sand filters can also be used to provide additional treatment to water treated via settling or basic filtration.

Implementation:

- The filters require delivery to the site and initial set up. The vendor can provide assistance with installation and operation.

Maintenance:

- The filters require regular service to monitor and maintain the level of the sand media. If subjected to high loading rates, filters can plug quickly.
- Venders generally provide data on maximum head loss through the filter. The filter should be monitored daily while in use, and cleaned when head loss reaches target levels.
- If cleaned by backwashing, the backwash water may need to be hauled away for disposal, or returned to the upper end of the treatment train for another pass through the series of dewatering BMPs.

Pressurized Bag Filter

Description:

- A pressurized bag filter is a unit composed of single filter bags made from polyester felt material. The water filters through the unit and is discharged through a header. Vendors provide bag filters in a variety of configurations. Some units include a combination of bag filters and cartridge filters for enhanced contaminant removal.

Appropriate Applications:

- Effective for the removal of sediment (sand and silt) and some metals, as well as the reduction of BOD, turbidity, and hydrocarbons. Oil absorbent bags are available for hydrocarbon removal.
- Filters can be used to provide secondary treatment to water treated via settling or basic filtration.

Implementation:

- The filters require delivery to the site and initial set up. The vendor can provide assistance with installation and operation.

Maintenance:

- The filter bags require replacement when the pressure differential equals or exceeds the manufacturer's recommendation.

Cartridge Filter

Description:

- Cartridge filters provide a high degree of pollutant removal by utilizing a number of individual cartridges as part of a larger filtering unit. They are often used as a secondary or higher (polishing) level of treatment after a significant amount of sediment and other pollutants are removed. Units come with various cartridge configurations (for use in series with bag filters) or with a larger single cartridge filtration unit (with multiple filters within).

Appropriate Applications:

- Effective for the removal of sediment (sand, silt, and some clays) and metals, as well as the reduction of BOD, turbidity, and hydrocarbons. Hydrocarbons can effectively be removed with special resin cartridges.
- Filters can be used to provide secondary treatment to water treated via settling or basic filtration.

Implementation:

- The filters require delivery to the site and initial set up. The vendor can provide assistance.

Maintenance:

- The cartridges require replacement when the pressure differential equals or exceeds the manufacturer's recommendation.

Maintenance and Inspection:	• Inspect and verify that activity-based BMPs are in place prior to the commencement of associated activities. • Observe non-stormwater BMPs as a part of routine activities. • Inspect dewatering operations during regular weekly, pre-rain event, extended event, and post rain event inspections. • Unit-specific maintenance requirements are included with the description of dewatering each unit. • Sediment removed during the maintenance of a dewatering device may be either spread onsite and stabilized, or disposed of at a disposal site as approved by the owner. • Sediment that is commingled with other pollutants must be disposed of in accordance with all applicable laws and regulations and as approved by the owner.

NS-6 Illicit Connection/Discharge

Description and Purpose: This is a non stormwater management control that includes procedures and practices designed for construction contractors to recognize illicit connections or illegally dumped or discharged materials on a construction site and report incidents.

Suitable Applications

This best management practice (BMP) applies to all construction projects. Illicit connection/discharge and reporting is applicable anytime an illicit connection or discharge is discovered or illegally dumped material is found on the construction site.

Implementation

Planning

- Review the SWPPP. Pre-existing areas of contamination should be identified and documented in the SWPPP.
- Inspect the site before beginning the job for evidence of illicit connections, illegal dumping or discharges. Document any pre-existing conditions.

Identification of Illicit Connections and Illegal Dumping or Discharges

- **General** – unlabeled and unidentifiable material should be treated as hazardous.
- **Solids** - Look for debris, or rubbish piles. Solid waste dumping often occurs on roadways with light traffic loads or in areas not easily visible from the traveled way.
- **Liquids** - signs of illegal liquid dumping or discharge can include:
  - Visible signs of staining or unusual colors to the pavement or surrounding adjacent soils
  - Pungent odors coming from the drainage systems
  - Discoloration or oily substances in the water or stains and residues detained within ditches, channels or drain boxes
  - Abnormal water flow during the dry weather season
- **Urban Areas** - Evidence of illicit connections or illegal discharges is typically detected at storm drain outfall locations or at manholes. Signs of an illicit connection or illegal discharge can include:
  - Abnormal water flow during the dry weather season
  - Unusual flows in subdrain systems used for dewatering
  - Pungent odors coming from the drainage systems
  - Discoloration or oily substances in the water or stains and residues detained within ditches, channels or drain boxes
  - Excessive sediment deposits, particularly adjacent to or near active offsite construction projects
- **Rural Areas** - Illicit connections or illegal discharges involving irrigation drainage ditches are detected by visual inspections. Signs of an illicit discharge can include:
  - Abnormal water flow during the non-irrigation season
  - Non-standard junction structures
  - Broken concrete or other disturbances at or near junction structures

Cleanup and Removal

The responsibility for cleanup and removal of illicit or illegal dumping or discharges will vary by location. Contact the local stormwater management agency for further information.

Maintenance and Inspection:	▪ Inspect the site for illicit discharged or connections during regular weekly, pre-rain event, extended event, and post rain event inspections. ▪ Observe site perimeter for evidence for potential of illicitly discharged or illegally dumped material, which may enter the job site. ▪ Observe non-stormwater BMPs as a part of routine activities.

	▪ Discourage employees and subcontractors from disposing of non-job related debris or materials at the construction site. ▪ Document and address illicit connections and illegal dumping or discharge incidents at the time of discovery. ▪ For illicit connections or discharges to the storm drain system, notify the local stormwater management agency. ▪ For illegal dumping, notify the local law enforcement agency.

NS-7 Potable Water and Irrigation

Description and Purpose: This is a non stormwater management control for potable water/irrigation that consists of practices and procedures to manage the discharge of potential pollutants generated during discharges from irrigation water lines, landscape irrigation, lawn or garden watering, planned and unplanned discharges from potable water sources, water line flushing, and hydrant flushing.

Suitable Applications
Implement this BMP whenever potable water or irrigation water discharges occur to or from a construction site.

Implementation

- Direct water from offsite sources around or through a construction site, where feasible, in a way that minimizes contact with the construction site.
- Discharges from water line flushing should be reused for landscaping purposes where feasible.
- Shut off the water source to broken lines, sprinklers, or valves as soon as possible to prevent excess water flow.
- Protect downstream stormwater drainage systems and watercourses from water pumped or bailed from trenches excavated to repair water lines.
- Inspect irrigated areas within the construction limits for excess watering. Adjust watering times and schedules to ensure that the appropriate amount of water is being used and to minimize runoff. Consider factors such as soil structure, grade, time of year, and type of plant material in determining the proper amounts of water for a specific area.

Maintenance and Inspection:	• Inspect and verify that activity-based BMPs are in place prior to the commencement of associated activities. • Inspect areas where potable water discharges may occur during regular weekly, pre-rain event, extended event, and post rain event inspections. • Observe non-stormwater BMPs as a part of routine activities. • Repair broken water lines as soon as possible. • Look for erosion. • Adjust irrigation timers if discharge from irrigation system occurs

NS-8 Vehicle and Equipment Cleaning

Description and Purpose: Vehicle and equipment cleaning procedures and practices are non stormwater management controls to eliminate or reduce the discharge of pollutants to stormwater from vehicle and equipment cleaning operations. Procedures and practices include but are not limited to: using offsite facilities; washing in designated, contained areas only; and eliminating discharges to the storm drain by infiltrating the wash water.

Suitable Applications

These procedures are suitable on all construction sites where vehicle and equipment cleaning is performed.

Implementation

- Avoid onsite vehicle and equipment cleaning. Other options to washing equipment onsite include contracting with either an offsite or mobile commercial washing business. These businesses may be better equipped to handle and dispose of the wash waters properly. Performing this work offsite can also be economical by eliminating the need for a separate washing operation onsite.
- Use phosphate-free, biodegradable soaps.
- Educate employees and subcontractors on pollution prevention measures.
- Do not permit steam cleaning onsite. Steam cleaning can generate significant pollutant concentrates.
- Cleaning of vehicles and equipment with soap, solvents or steam should not occur on the project site unless resulting wastes are fully contained and disposed of. Resulting wastes should not be discharged or buried, and must be captured and recycled or disposed according to the requirements of WM-10, Liquid Waste Management or WM-6, Hazardous Waste Management, depending on the waste characteristics. Minimize use of solvents.
- Use of diesel for vehicle and equipment cleaning is prohibited.
- All vehicles and equipment that regularly enter and leave the construction site such as employee or subcontractor's work must be cleaned offsite.
- When vehicle and equipment washing and cleaning must occur onsite, and the operation cannot be located within a structure or building equipped with appropriate disposal facilities, the outside cleaning area should have the following characteristics:
    - Located away from storm drain inlets, drainage facilities, or watercourses
    - Paved with concrete or asphalt and bermed to contain wash waters and to prevent run on and runoff
    - Configured with a sump to allow collection and disposal of wash water
    - No discharge of wash waters to storm drains or watercourses
    - Used only when necessary
- When cleaning vehicles and equipment with water:
    - Use as little water as possible. High-pressure sprayers may use less water than a hose and should be considered
    - Use positive shutoff valve to minimize water usage
    - Facility wash racks should discharge to a sanitary sewer, recycle system or other approved discharge system and must not discharge to the storm drainage system, water courses, or to groundwater.

Maintenance and Inspection:	**Inspection and Maintenance** • Inspect and verify that activity-based BMPs are in place prior to the commencement of associated activities. • Observe non-stormwater BMPs as a part of routine activities.

	• Inspection and maintenance is MINIMUM, although some berm repair may be necessary. • Monitor employees and subcontractors throughout the duration of the construction project to ensure appropriate practices are being implemented. • Inspect sump routinely and remove liquids and sediment as needed. • Employees and subcontractors should not wash personal vehicles and equipment on the construction site.

NS-9 Vehicle and Equipment Fueling

Description and Purpose: Vehicle and equipment fueling procedures and practices are designed to prevent fuel spills and leaks, and reduce or eliminate contamination of stormwater. This can be accomplished by using offsite facilities, fueling in designated areas only, enclosing or covering stored fuel and implementing spill controls.

Suitable Applications

These procedures are suitable on all construction sites where vehicle and equipment fueling takes place.

Implementation

- Onsite vehicle and equipment fueling should only be used where it is impractical to send vehicles and equipment offsite for fueling.
- Use offsite fueling stations as much as possible. These businesses are better equipped to handle fuel and spills properly. Performing this work offsite can also be economical by eliminating the need for a separate fueling area at a site.
- Discourage "topping-off" of fuel tanks.
- Absorbent spill cleanup materials and spill kits should be available in fueling areas and on fueling trucks, and should be disposed of properly after use.
- Drip pans or absorbent pads should be used during vehicle and equipment fueling, unless the fueling is performed over an impermeable surface in a dedicated fueling area.
- Use absorbent materials on small spills. Do not hose down or bury the spill. Remove the adsorbent materials promptly and dispose of properly.
- Avoid mobile fueling of mobile construction equipment around the site; rather, transport the equipment to designated fueling areas. With the exception of tracked equipment such as bulldozers and large excavators, most vehicles should be able to travel to a designated area with little lost time.
- When fueling must take place onsite, designate an area away from drainage courses to be used.
- Dedicated fueling areas should be protected from stormwater run-on and run-off, and should be located at least 50 feet away from downstream drainage facilities and watercourses. Fueling must be performed on level-grade areas.
- Protect fueling areas with berms and dikes to prevent run-on, run-off, and to contain spills.
- Nozzles used in vehicle and equipment fueling should be equipped with an automatic shutoff to control drips. Fueling operations should not be left unattended.
- Use vapor recovery nozzles to help control drips as well as air pollution where required by Air Quality Management Districts (AQMD).
- Federal, state, and local requirements should be observed for any stationary above ground storage tanks.

Maintenance and Inspection:	• Inspect and verify that activity-based BMPs are in place prior to the commencement of associated activities. • While activities associated with the BMP are under way, inspect during regular weekly, pre-rain event, extended event, and post rain event inspections. • Vehicles and equipment should be inspected routinely for leaks. • Leaks should be repaired immediately or problem vehicles or equipment should be removed from the project site. • Immediately clean up spills and properly dispose of contaminated soil and cleanup materials.

NS-10 Vehicle and Equipment Maintenance

Description and Purpose: This is a non-stormwater management measure used to prevent or reduce the contamination of stormwater resulting from vehicle and equipment maintenance by running a "dry and clean site". The best option would be to perform maintenance activities at an offsite facility. If this option is not available then work should be performed in designated areas only, while providing cover for materials stored outside, checking for leaks and spills, and containing and cleaning up spills immediately. These procedures are suitable on all construction projects where an onsite yard area is necessary for storage and maintenance of heavy equipment and vehicles.

Implementation:

- Onsite vehicle and equipment maintenance should only be used where it is impractical to send vehicles and equipment offsite for maintenance and repair.
- Use offsite repair shops as much as possible. These businesses are better equipped to handle vehicle fluids and spills properly. Performing this work offsite can also be economical by eliminating the need for a separate maintenance area.
- If maintenance must be done onsite, use designated areas, located away from drainage courses.
- Dedicated maintenance areas should be protected from stormwater run-on and run-off, and should be located at least 50 feet from downstream drainage facilities and watercourses.
- Drip pans or absorbent pads should be used during vehicle and equipment maintenance work that involves fluids, unless the maintenance work is performed over an impermeable surface in a dedicated maintenance area.
- Place a stockpile of spill cleanup materials where it will be readily accessible.
- All fueling trucks and fueling areas are required to have spill kits and/or use other spill protection devices.
- Use adsorbent materials on small spills. Remove the absorbent materials promptly and dispose of properly.
- Look for leaks of fluids or oil from vehicles and equipment, at start up and repair immediately or place out of service with drip pans of buckets to contain the leaked material. Properly dispose of leaked material.
- Keep vehicles and equipment clean; do not allow excessive build-up of oil and grease.
- Segregate and recycle wastes, such as greases, used oil or oil filters, antifreeze, cleaning solutions, automotive batteries, hydraulic and transmission fluids. Provide secondary containment and covers for these materials if stored onsite.
- Drip pans or plastic sheeting should be placed under all vehicles and equipment placed on docks, barges, or other structures over water bodies when the vehicle or equipment is planned to be idle for more than 1 hour.
- For long-term projects, consider using portable tents or covers over maintenance areas if maintenance cannot be performed offsite.
- Properly dispose of used oils, fluids, lubricants, and spill cleanup materials.
- Do not place used oil in a dumpster or pour into a storm drain or watercourse.
- Properly dispose of or recycle used batteries.
- Do not bury used tires.

Listed below is further information if you must perform vehicle or equipment maintenance onsite.

Waste Reduction

Parts are often cleaned using solvents such as trichloroethylene, trichloroethane, or methylene chloride. Many of these cleaners are listed in California Toxic Rule as priority pollutants. These materials are harmful and must not contaminate stormwater. They must be disposed of as a hazardous waste. Reducing the number of solvents makes recycling easier and reduces hazardous waste management costs. Often, one solvent can perform a job as well as two different solvents. Also, if possible, eliminate or reduce the amount of hazardous materials and waste by substituting non-hazardous or less hazardous materials. For example, replace chlorinated organic solvents with non-chlorinated solvents. Non-chlorinated solvents like kerosene or mineral spirits are less toxic and less expensive to dispose of properly. Check the list of active ingredients to see whether it contains chlorinated solvents. The "chlor" term indicates that the solvent is chlorinated. Also, try substituting a wire brush for solvents to clean parts.

Recycling and Disposal

- Separating wastes allows for easier recycling and may reduce disposal costs. Keep hazardous wastes separate, do not mix used oil solvents, and keep chlorinated solvents (such as trichloroethane) separate from non-chlorinated solvents (like kerosene and mineral spirits). Promptly transfer used fluids to the proper waste or recycling drums.
- Don't leave full drip pans or other open containers lying around. Provide cover and secondary containment until these materials can be removed from the site.
- Oil filters can be recycled. Ask your oil supplier or recycler about recycling oil filters.
- Do not dispose of extra paints and coatings by dumping liquid onto the ground or throwing it into dumpsters. Allow coatings to dry or harden before disposal into covered dumpsters.
- Store cracked batteries in a non-leaking secondary container. Do this with all cracked batteries, even if you think all the acid has drained out. If you drop a battery, treat it as if it is cracked. Put it into the containment area until you are sure it is not leaking.

Maintenance and Inspection:	**Inspection and Maintenance** • Verify that activity-based BMPs are in place prior to the commencement of associated activities. • Inspect during regular weekly, pre-rain event, extended event, and post rain event inspections. • Observe non-stormwater BMPs as a part of routine activities. • Keep ample supplies of spill cleanup materials onsite. • Maintain waste fluid containers in leak proof condition. • Vehicles and equipment should be inspected on each day of use. Leaks should be repaired immediately or the problem vehicle(s) or equipment should be removed from the project site. • Inspect equipment for damaged hoses and leaky gaskets routinely. Repair or replace as needed.

NS-12 Concrete Curing

Description and Purpose: Concrete curing is used in the construction of structures such as bridges, retaining walls, pump houses, large slabs, and structured foundations. Concrete curing includes the use of both chemical and water methods. Discharges of stormwater and non-stormwater exposed to concrete during curing may have a high pH and may contain chemicals, metals, and fines. Proper procedures reduce or eliminate the contamination of stormwater runoff during concrete curing.

Suitable Applications
Suitable applications include all projects where Portland Cement Concrete (PCC) and concrete curing chemicals are placed where they can be exposed to rainfall, runoff from other areas, or where runoff from the PCC will leave the site.

Implementation
Chemical Curing

- Avoid over spray of curing compounds.
- Minimize the drift of chemical cure as much as possible by applying the curing compound close to the concrete surface.
- Apply an amount of compound that covers the surface, but does not allow any runoff of the compound.
- Use proper storage and handling techniques for concrete curing compounds. Refer to WM-1, Material Delivery and Storage.
- Protect drain inlets prior to the application of curing compounds.
- Refer to WM-4, Spill Prevention and Control.

Water Curing for Bridge Decks, Retaining Walls, and other Structures

- Direct cure water away from inlets and watercourses to collection areas for infiltration or other means of removal in accordance with all applicable permits.
- Collect cure water at the top of slopes and transport or dispose of water in a non-erodible manner.
- Utilize wet blankets or a similar method that maintains moisture while minimizing the use and possible discharge of water.

Maintenance and Inspection:	**Inspection and Maintenance** • Inspect and verify that activity-based BMPs are in place prior to the commencement of associated activities. • Inspect during regular weekly, pre-rain, extended event, and post rain event inspections. • Inspect cure containers and spraying equipment for leaks. • Observe non stormwater BMPs as a part of routine activity • Ensure that employees and subcontractors implement appropriate measures for storage, handling, and use of curing compounds.

NS-13 Concrete Finishing

Description and Purpose: Concrete finishing methods are used for bridge deck rehabilitation, paint removal, curing compound removal, and final surface finish appearances. Methods include sand blasting, shot blasting, grinding, or high pressure water blasting. Stormwater and non-stormwater exposed to concrete finishing by-products may have a high pH and may contain chemicals, metals, and fines. Proper procedures and implementation of appropriate non stormwater management measures can minimize the impact that concrete finishing methods may have on stormwater and non-stormwater discharges.

Suitable Applications

These procedures apply to all construction locations where concrete finishing operations are performed.

Implementation

- Divert blasting water to a collection/containment area.
- Collect and properly dispose of water from high-pressure water blasting operations.
- Collect contaminated water from blasting operations at the top of slopes. Transport or dispose of contaminated water while using BMPs such as those for erosion control.
- Direct water from blasting operations away from inlets and watercourses to collection areas for infiltration or other means of removal (dewatering).
- Protect inlets during sandblasting operations.
- Minimize the drift of dust and blast material as much as possible by keeping the blasting nozzle close to the surface.
- When blast residue contains a potentially hazardous waste, refer to WM-6, Hazardous Waste Management.

Maintenance and Inspection:	**Inspection and Maintenance** • Inspect and verify that activity-based BMPs are in place prior to the commencement of associated activities. • Inspect areas where concrete finishing is taking place during regular weekly, pre-rain, extended event, and post rain event inspections. • Observe non stormwater BMPs as a part of routine activity. • At the end of each work shift, remove and contain liquid and solid waste from containment structures, if any, and from the general work area. • Sweep or vacuum up debris from sandblasting at the end of each shift.

SECTION 8.0 EROSION CONTROL BMPS

EC-1 Scheduling

***Description and Purpose* Scheduling**

Scheduling is an erosion control that consists of the development of a written plan that includes sequencing of construction activities and the implementation of BMPs such as erosion control and sediment control while taking local climate (rainfall, wind, etc.) into consideration. The purpose is to reduce the amount and duration of soil exposed to erosion by wind, rain, runoff, and vehicle tracking, and to perform the construction activities and control practices in accordance with the planned schedule.

Suitable Applications:

Proper sequencing of construction activities to reduce erosion potential should be incorporated into the schedule of every construction project especially during rainy season.

Implementation:

- If the actual start dates for construction activities vary significantly from the tentative schedule the construction schedule in the SWPPP should be reviewed and updated accordingly.
- Avoid earth disturbing activity during rainy periods. Schedule major grading operations during dry months when practical.
- Incorporate *Sequence of Construction Activities and Associated BMPs* with the implementation and deployment of:
    - Erosion control BMPs
    - Sediment control BMPs
    - Tracking control BMPs
    - Wind erosion control BMPs
    - Non-stormwater BMPs
    - Waste management and materials pollution control BMPs
- Sequence trenching activities so that most open portions are closed before new trenching begins.
- Incorporate staged seeding and re-vegetation of graded slopes as work progresses.
- Schedule establishment of permanent vegetation during appropriate planting time for specified vegetation.
- Regularly monitor the weather forecast for rainfall.
- When rainfall is predicted, adjust the construction schedule to allow the implementation of additional soil stabilization and sediment treatment controls on all disturbed areas prior to the onset of rain.
- Apply permanent erosion controls to areas deemed substantially complete in accordance with stabilization requirements in the applicable California Construction General Permit.

Maintenance and Inspection:	• QSD to update the SWPPP with appropriate BMPs if the original schedule has significantly changed or if a change in the timing or selection of BMPs is warranted.

WE-1 Wind Erosion Control

Description and Purpose: Wind erosion or dust control consists of applying water, soil cover, or dust palliatives as necessary to prevent or alleviate dust nuisance and soil transport generated by construction activities. Covering small stockpiles or disturbed areas is an alternative to applying water or dust palliatives. Materials applied as temporary soil stabilizers and soil binders also generally provide wind erosion control benefits.

Suitable Applications

Most BMPs that provide protection against water-based erosion will also protect against wind-based erosion and dust control requirements required by other agencies will generally meet wind erosion control requirements for water quality protection. Wind erosion control BMPs are suitable during the following construction activities:

- Construction vehicle traffic on unpaved roads
- Drilling and blasting activities
- Soils and debris storage piles
- Batch drop from front-end loaders
- Areas with unstabilized soil
- Final grading/site stabilization

Implementation (See dust control practices grid for dust control practices applicable to this site)

Many local agencies including air quality management districts and municipalities require dust control in order to comply with local nuisance laws, opacity laws (visibility impairment) and the requirements of the Clean Air Act.

General

- Install a stabilized entry to access points where unpaved traffic surfaces adjoin paved roads.
- Provide covers for haul trucks transporting materials that contribute to dust.
- Apply water or chemical stabilization during construction as needed to control dust.
- Suppress dust when loading trucks with soil, dirt, debris or other construction materials.
- Avoid over application of water or chemicals to the extent that it creates a non-stormwater discharge.
- Provide for rapid clean up of sediments deposited on paved roads.
- Stabilize stockpiles per WM-3 Stockpile Management.
- Stabilize inactive disturbed areas with mulch, vegetation or chemical stabilization methods.
- For chemical stabilization, there are many products available for chemically stabilizing grave roadways and stockpiles. If chemical stabilization is used, the chemicals should not create any adverse effects on stormwater, plant life, or groundwater.
- If reclaimed waste water is used as a dust control measure, the sources and discharge must meet California Department of Health Services water reclamation criteria and the Regional Water Quality Control Board requirements. Non-potable water should not be conveyed in tanks or drain pipes that will be used to convey potable water and there should be no connection between potable and non-potable supplies. Non-potable tanks, pipes, and other conveyances should be marked, "NON-POTABLE WATER - DO NOT DRINK.
- Dust control measures are to be performed in accordance with the approved project dust control plan in Appendix E of this document.

Maintenance and Inspection:	• Verify that activity-based BMPs are installed and/or available prior to and during the commencement of dust generating activity. • Check stabilized areas and stockpiles for the implementation of adequate dust controls. • Apply water, stabilization, or dusts suppressant if dust is being generated or additional measures are needed.

Table 7 Dust Control Practices

Site Condition	Dust Control Practices								
	Permanent Vegetation	**Mulching**	**Wet Suppression (Watering)**	**Chemical Dust Suppression**	**Gravel or Asphalt**	**Silt Fences**	**Temporary Gravel Construction Entrances/ Equipment Wash Down**	**Haul Truck Covers**	**Minimize Extent of Disturbed Area**
Disturbed Areas not Subject to Traffic		x	x	x	x	x	x	x	x
Disturbed Areas Subject to Traffic		x	x	x	x	x	x	x	x
Material Stock Pile Stabilization		x	x	x	x	x	x	x	x
Demolition	x	x	x		x	x	x	x	x
Clearing/ Excavation		x	x	x	x	x	x	x	x
Truck Traffic on Unpaved Roads		x	x	x	x	x	x	x	x
Mud/Dirt Carry-Out		x	x	x	x	x	x	x	x

SECTION 9.0 SEDIMENT CONTROL BMPS

SE-1 Silt Fence

Description and Purpose: Silt fence is a sediment control made of a filter fabric that has been entrenched, attached to supporting poles, and sometimes backed by a plastic or wire mesh for support. The silt fence detains sediment-laden water, promoting sedimentation behind the fence.

Suitable Applications

Silt fences are suitable for perimeter control, placed below areas where sheet flows discharge from the site. They should also be used as interior controls below disturbed areas where runoff may occur in the form of sheet and rill erosion. Silt fences are generally ineffective in locations where the flow is concentrated and are only applicable for sheet or overland flows. Silt fences are most effective when used in combination with erosion controls. Suitable applications include:

- Along the perimeter of a project.
- Below the toe or down slope of exposed and erodible slopes.
- Along streams and channels.
- Around temporary spoil areas and stockpiles.
- Below other small cleared areas.

Limitations:

- Do not use in streams, channels, drain inlets, or anywhere flow is concentrated.
- Do not use in locations where ponded water may cause flooding.
- Do not place fence on a slope, or across any contour line. If not installed at the same elevation (contour line) throughout, silt fences will create erosion.
- Filter fences will create a temporary sedimentation pond on the upstream side of the fence and may cause temporary flooding. Fences not constructed on a level contour will be overtopped by concentrated flow resulting in failure of the filter fence.
- Improperly installed fences are subject to failure from undercutting, overlapping, or collapsing.
- Not effective unless trenched and keyed in.
- Not intended for use as mid-slope protection on slopes greater than 4:1 (horizontal:vertical).
- Do not allow water depth to exceed 1.5 feet at any point.

Implementation

General

A silt fence is a temporary sediment barrier consisting of filter fabric stretched across and attached to supporting posts, entrenched, and, depending upon the strength of fabric used, supported with plastic or wire mesh fence. Silt fences trap sediment by intercepting and detaining small amounts of sediment-laden runoff from disturbed areas in order to promote sedimentation behind the fence.

Silt fences are preferable to straw bale barriers in many cases. The following layout and installation guidance can improve performance and should be followed:

- Use principally in areas where sheet flow occurs.
- Don't use silt fences to divert flow.
- Don't use directly above or below slopes subject to creep, slumping, or landslides.
- Select filter fabric that retains 85% of soil by weight, based on sieve analysis, but that is not finer than an equivalent opening size of 70.
- Install along a level contour.
- The length of slope draining to any point along the silt fence should be 200 feet or less.

- The maximum slope perpendicular to the fence line should be 1:1.
- Provide sufficient room for runoff to pond behind the fence and to allow sediment removal equipment to pass between the silt fence and toes of slopes or other obstructions. About 1,200 square feet of ponding area should be provided for every acre draining to the fence.
- Turn the ends of the filter fence uphill to prevent stormwater from flowing around the fence.
- Leave an undisturbed or stabilized area immediately down slope from the fence where feasible.
- Silt fences should remain in place until the disturbed area is permanently stabilized.

Design and layout

Selection of a filter fabric is based on soil conditions at the construction site (which affect the equivalent opening size (EOS) fabric specification) and characteristics of the support fence (which affect the choice of tensile strength). The designer should specify a filter fabric that retains the soil found on the construction site yet that it has openings large enough to permit drainage and prevent clogging. The following criteria is recommended for selection of the equivalent opening size:

1. If 50 percent or less of the soil, by weight, will pass the U.S. Standard Sieve No. 200, select the EOS to retain 85% of the soil. The EOS should not be finer than EOS 70.

2. For all other soil types, the EOS should be no larger than the openings in the U.S. Standard Sieve No. 70 except where direct discharge to a stream, lake, or wetland will occur, then the EOS should be no larger than Standard Sieve No. 100.

To reduce the chance of clogging, it is preferable to specify a fabric with openings as large as allowed by the criteria. No fabric should be specified with an EOS smaller than U.S. Standard Sieve No. 100. If 85% or more of a soil, by weight, passes through the openings in a No. 200 sieve, filter fabric should not be used. Most of the particles in such a soil would not be retained if the EOS was too large and they would clog the fabric quickly if the EOS were small enough to capture the soil.

The fence should be supported by a plastic or wire mesh if the fabric selected does not have sufficient strength and bursting strength characteristics for the planned application (as recommended by the fabric manufacturer). Filter fabric material should contain ultraviolet inhibitors and stabilizers to provide a minimum of six months of expected usable construction life at a temperature range of 0 to 120 degrees Fahrenheit.

- Layout in accordance with attached figures.
- For slopes steeper than 2:1 (horizontal:vertical) and that contain a high number of rocks or large dirt clods that tend to dislodge, it may be necessary to install additional protection immediately adjacent to the bottom of the slope, prior to installing silt fence. Additional protection may be a chain link fence or a cable fence.
- For slopes adjacent to sensitive receiving waters or Environmentally Sensitive Areas (ESAs), silt fence should be used in conjunction with erosion control BMPs.

Materials

- Silt fence fabric should be woven polypropylene with a minimum width of 36 inches and a minimum tensile strength of 100 lb force. The fabric should conform to the requirements in ASTM designation D4632 and should have an integral reinforcement layer. The reinforcement layer should be a polypropylene, or equivalent, net provided by the manufacturer. The permittivity of the fabric should be between 0.1 sec^{-1} and 0.15 sec^{-1} in conformance with the requirements in ASTM designation D4491.

- 2" X 2" wood stakes should be commercial quality lumber of the size and shape shown on the plans. Each stake should be free from decay, splits or cracks longer than the thickness of the stake or other defects that would weaken the stakes and cause the stakes to be structurally unsuitable.
- Staples used to fasten the fence fabric to the stakes should be not less than 1.75 in. long and should be fabricated from 15 gauge or heavier wire. The wire used to fasten the tops of the stakes together when joining two sections of fence should be 9 gauge or heavier wire. Galvanizing of the fastening wire will not be required.
- There are new products that may use prefabricated plastic holders for the silt fence and use bar reinforcement instead of wood stakes. If bar reinforcement is used in lieu of wood stakes, use number four or greater bar. Provide end protection for any exposed bar reinforcement.

Installation Guidelines

- Silt fences are to be constructed on a level contour. Sufficient area should exist behind the fence for ponding to occur without flooding or overtopping the fence.
- A trench should be excavated approximately 6 in. wide and 6 in. deep along the line the proposed silt fence.
- The bottom of the silt fence "Flap" should be keyed-in a minimum of 12 inches.
- Posts should be spaced a maximum of 6 feet apart and driven securely into the ground a minimum of 18 in. or 12 in. below the bottom of the trench.
- When standard strength filter fabric is used, a plastic or wire mesh support fence should be fastened securely to the upslope side of posts using heavy-duty wire staples at least 1 in. long. The mesh should extend into the trench. When extra-strength filter fabric and closer post spacing are used, the mesh support fence may be eliminated. Filter fabric should be purchased in a long roll, and then cut to the length of the barrier. When joints are necessary, filter cloth should be joined together by wrapping the fabric around the end post(s) 360 degrees to create a secure "splice" and then driving the posts into the ground.
- The trench should be backfilled with compacted native material.
- Construct silt fences with a setback of at least 3 feet from the toe of a slope. Where a silt fence is determined to be not practicable due to specific site conditions, the silt fence may be constructed at the toe of the slope, but should be constructed as far from the toe of the slope as practicable. Silt fences close to the toe of the slope will be less effective and difficult to maintain.
- Construct the length of each reach so that the change in base elevation along the reach does not exceed 1/3 the height of the barrier; in no case should the reach exceed 500 feet.
- Risk Level 2 & 3 dischargers shall apply linear sediment controls along the toe of the slope, face of the slope, and at the grade breaks of exposed slopes to comply with sheet flow lengths in accordance with Table 8. This table does not apply to Level 1 sites.

Maintenance and Inspection:	• Verify that activity-based BMPs are in place prior to the commencement of associated activities. • Inspect silt fence during regular weekly, pre-rain event, extended event, and post rain event inspections. • Repair undermined silt fences. • Repair or replace split, torn, slumping, or weathered fabric. • Silt fences that are damaged and become unsuitable for the intended purpose should be removed from the site of work, disposed of, and replaced with new silt fence barriers. • Sediment that accumulates in the BMP must be periodically removed in order to maintain BMP effectiveness. Sediment must be removed when the sediment accumulation reaches one third of

	the barrier height. Sediment removed during maintenance may be incorporated into earthwork on the site or disposed at an appropriate location. • Silt fences should be left in place until the upstream area is permanently stabilized. Until then, the silt fence must be inspected and maintained. • Holes, depressions, or other ground disturbance caused by the removal of the silt fences should be backfilled and repaired.

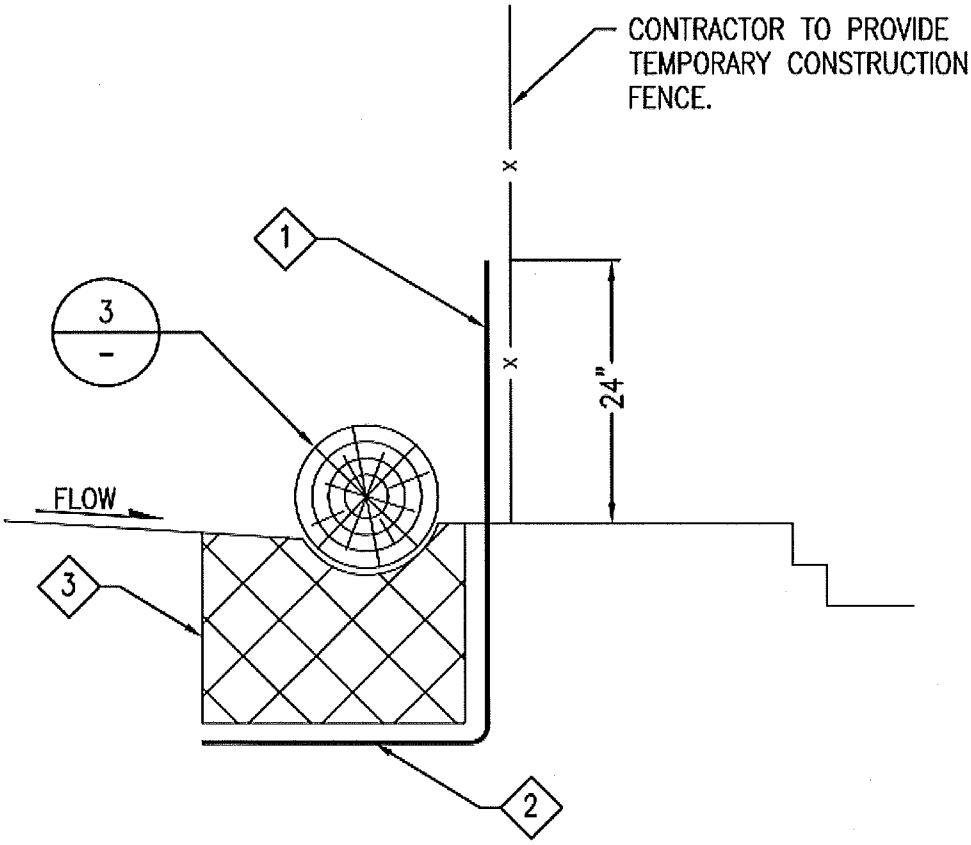

NOTES:

1. FILTER FABRIC MATERIAL. USE WIRE RINGS TO ATTACH FABRIC TO FENCE.
2. BURY BOTTOM OF FILTER FABRIC MATERIAL UNDER 6"X6" TRENCH.
3. PROVIDE 6"X6" TRENCH

Table 8 Critical Slope/Sheet Flow* Length Combinations

Slope Percentage	Sheet flow* length not to exceed
0-25%	20 feet
25-50%	15 feet
Over 50%	10 feet

* Sheet flow is the length that shallow, low velocity flow travels across a site

SE-5 Fiber Rolls

Description and Purpose: A fiber roll is a sediment control that consists of straw, flax, or other similar materials bound into a tight tubular roll. When fiber rolls are placed at the toe and on the face of slopes, they intercept runoff, reduce its flow velocity, release the runoff as sheet flow, and provide removal of sediment from the runoff. By interrupting the length of a slope, fiber rolls can also reduce erosion.

Suitable Applications

Fiber rolls may be suitable:

- Along the toe, top, face, and at grade breaks of exposed and erodible slopes to shorten slope length and spread runoff as sheet flow.
- At the end of a downward slope where it transitions to a steeper slope.
- Along the perimeter of a project.
- As check dams in unlined ditches with minimal grade.
- Down-slope of exposed soil areas.
- At operational storm drains as a form of inlet protection.
- Around temporary stockpiles.

Implementation

- Fiber rolls should be either prefabricated rolls or rolled tubes of erosion control blanket.
- Fiber rolls are made from weed free rice straw, flax, or a similar agricultural material bound into a tight tubular roll by netting.
- Typical fiber rolls vary in diameter from 9 in. to 20 in. Larger diameter rolls are available as well.

Assembly of Field Rolled Fiber Roll

- Roll length of erosion control blanket into a tube of minimum 8 in. diameter.
- Bind roll at each end and every 4 ft along length of roll with jute-type twine.

Installation

- Install fiber rolls on contours spaced as follows:

Slope Percentage	Sheet Flow not to exceed
0-25%	20 feet
25-50%	15 feet
Over 50%	10 feet

- Turn the ends of the fiber roll up slope to prevent runoff from going around the roll.
- Stake fiber rolls into a 2 to 4 in. deep trench with a width equal to the diameter of the fiber roll.
  - Drive stakes at the end of each fiber roll and spaced 4 ft maximum on center.
  - Use wood stakes with a nominal classification of 0.75 by 0.75 in. and minimum length of 24 in.
- If more than one fiber roll is placed in a row, the rolls should be overlapped, not abutted.

Removal

- Fiber rolls are typically left in place. If fiber rolls are removed, collect and dispose of sediment accumulation, and fill and compact holes, trenches, depressions or any other ground disturbance to blend with adjacent ground.

***Maintenance and Inspection*:**	• Verify that activity-based BMPs are in place prior to the commencement of associated activities. • Inspect fiber rolls during regular weekly, pre-rain event, extended event, and post rain event inspections.

	• Repair or replace split, torn, unraveling, or slumping fiber rolls. • If the fiber roll is used as a sediment capture device, or as an erosion control device to maintain sheet flows, sediment that accumulates in the BMP must be periodically removed in order to maintain BMP effectiveness. • Sediment should be removed when sediment accumulation reaches one-half the designated sediment storage depth, usually one-half the distance between the top of the fiber roll and the adjacent ground surface. • Sediment removed during maintenance may be incorporated into earthwork on the site or disposed of at an appropriate location.

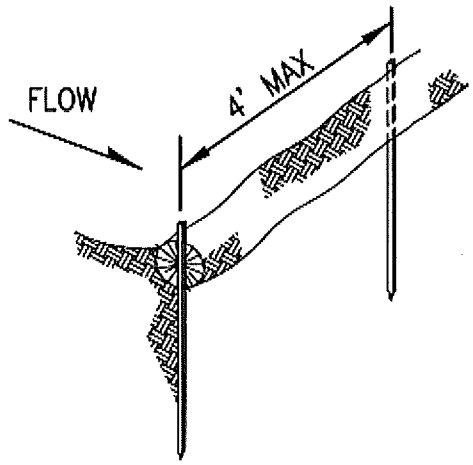

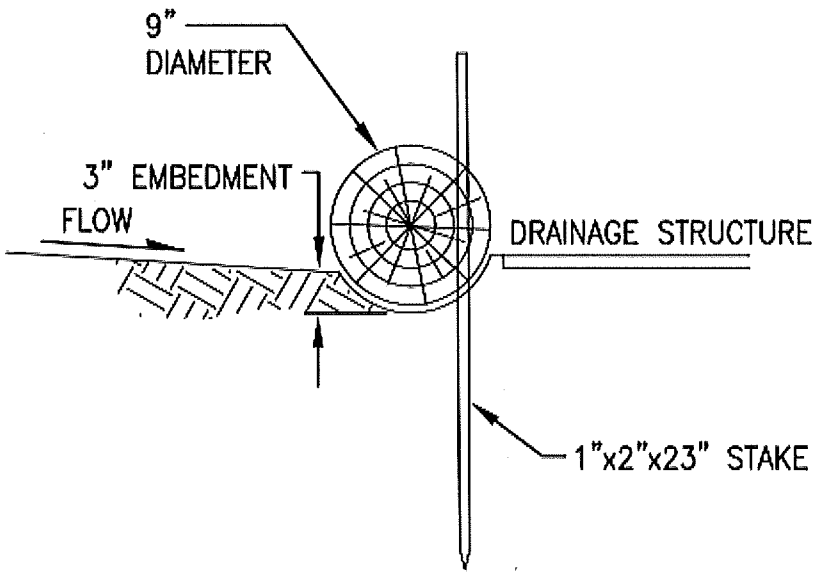

SE-6 Gravel Bag Berm

Description and Purpose:
A gravel bag berm is a series of gravel-filled bags placed on a level contour to intercept sheet flows. Gravel bags pond sheet flow runoff, allowing sediment to settle out, and release runoff slowly as sheet flows, preventing erosion. The temporary ponding provides quiescent conditions allowing sediment to settle. The open graded gravel in the bags is porous, which allows the ponded runoff to flow slowly through the bags, releasing the runoff as sheet flows. Gravel bag berms also interrupt the slope length and thereby reduce erosion by reducing the tendency of sheet flows to concentrate into rivulets, which erode rills, and ultimately gullies, into disturbed, sloped soils. Gravel bag berms are similar to sand bag barriers, but are more porous.

Suitable Applications
Gravel bag berms may be suitable:

- As a linear sediment control measure:
  - Below the toe of slopes and erodible slopes
  - As sediment traps at culvert/pipe outlets
  - Below other small cleared areas
  - Along the perimeter of a site
  - Down slope of exposed soil areas
  - Around temporary stockpiles and spoil areas
  - Parallel to a roadway to keep sediment off paved areas
  - Along streams and channels
  - As sediment traps at storm drain inlets
  - As check dams up gradient of inlet protection
  - As a sediment control at the back of curb
- As linear erosion control measure:
  - Along the face and at grade breaks of exposed and erodible slopes to shorten slope length and spread runoff as sheet flow
  - At the top of slopes to divert runoff away from disturbed slopes
  - As check dams across mildly sloped construction roads

Implementation
Design and Layout

- Locate gravel bag berms on level contours.
- When used for slope interruption, the following slope/sheet flow length combinations apply:
  - Slope inclination of 4:1 (horizontal:vertical) or flatter: Gravel bags should be placed at a maximum interval of 20 feet with the first row near the slope toe.
  - Slope inclination between 4:1 and 2:1 (horizontal:vertical): Gravel bags should be placed at a maximum interval of 15 feet (a closer spacing is more effective) with the first row near the slope toe.
  - Slope inclination 2:1 (horizontal:vertical) or greater: Gravel bags should be placed at a maximum interval of 10 feet (a closer spacing is more effective) with the first row near the slope toe.
- Turn the ends of the gravel bag barriers up slope to prevent runoff from going around the berm.
- Allow sufficient space up slope from the gravel bag berm to allow ponding, and to provide room for sediment storage.
- For installation near the toe of the slope, consider moving the gravel bag barriers away from the

slope toe to facilitate cleaning. To prevent flows behind the barrier, bags can be placed perpendicular to a berm to serve as cross barriers.

- Drainage area should not exceed 5 acres.
- In Non-Traffic Areas:
  - Height = 36 in. minimum
  - Top width = 24 in. minimum for three or more layer construction
  - Top width = 12 in. minimum for one or two layer construction
  - Side slopes = 2:1 or flatter
- In Construction Traffic Areas:
  - Height = 36 in. minimum
  - Top width = 24 in. minimum for three or more layer construction.
  - Top width = 12 in. minimum for one or two layer construction.
  - Side slopes = 2:1 or flatter
- Butt ends of bags tightly
- On multiple rows, or multiple layer construction, overlap butt joints of adjacent row and row beneath.
- Use a pyramid approach when stacking bags.

Materials

- Bag Material: Bags should be woven polypropylene, polyethylene or polyamide fabric or burlap, minimum unit weight of 4 ounces/yd^2, Mullen burst strength exceeding 300 lb/in^2 in conformance with the requirements in ASTM designation D3786, and ultraviolet stability exceeding 70% in conformance with the requirements in ASTM designation D4355.
- Bag Size: Each gravel-filled bag should have a length of 18 in., width of 12 in., thickness of 3 in., and mass of approximately 33 lbs. Bag dimensions are nominal, and may vary based on locally available materials.
- Fill Material: Fill material should be 0.5 to 1 in. Class 2 permeable material clean and free from clay, organic matter, and other deleterious material, or other suitable open graded, non-cohesive, porous gravel.

Maintenance and Inspection:	• Inspect gravel bags during regular weekly, pre-rain event, extended event, and post rain event inspections. • Gravel bags exposed to sunlight may need to be replaced over time due to degradation of the bags. • Reshape or replace gravel bags as needed. • Repair washouts or other damage as needed. • Sediment should be removed when the sediment accumulation reaches one-third of the barrier height. • Remove gravel bag berms when no longer needed. Remove sediment accumulation and clean, re-grade, and stabilize the area. • Removed sediment should be incorporated in the project or disposed of.

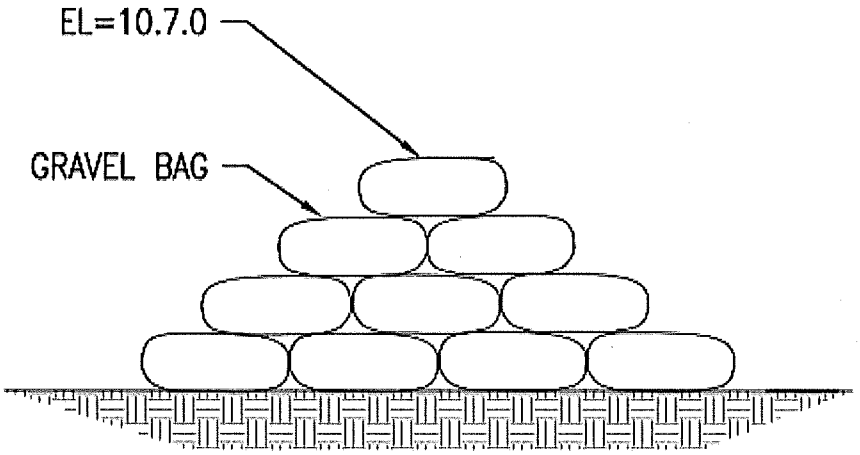

SECTION A – A

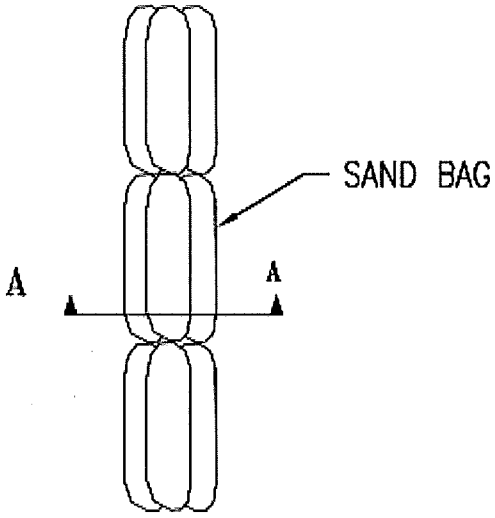

PLAN

SE-7 Street Sweeping and Vacuuming

Description and Purpose: Street sweeping and vacuuming is a sediment control that includes the use of self-propelled and walk-behind equipment to remove sediment from streets and roadways, and to clean paved surfaces in preparation for final paving. Sweeping and vacuuming streets prevents sediment from the project site from entering storm drains or receiving waters.

Suitable Applications

Sweeping and vacuuming are suitable anywhere sediment is tracked from the project site onto public or private paved streets and roads, typically at points of egress. Sweeping and vacuuming are also applicable during preparation of paved surfaces for final paving.

Implementation

- Controlling the number of points where vehicles can leave the site will allow sweeping and vacuuming efforts to be focused, and perhaps save money.
- Inspect potential sediment tracking locations daily
- Visible sediment tracking should be swept or vacuumed on a daily basis.
- Avoid using equipment with only kick brooms or sweeper attachments as they tend to spread the dirt rather than remove it.
- If not mixed with debris, trash, or other pollutants, consider incorporating the removed sediment back into the project

Maintenance and Inspection:	• Verify that activity-based BMPs are in place prior to the commencement of associated activities. • When actively in use, points of ingress and egress must be inspected daily. • When tracked or spilled sediment is observed outside the construction limits, it must be removed at least daily. More frequent removal, even continuous removal, may be required in some jurisdictions. • Be careful not to sweep up any unknown substance or any object that may be potentially hazardous. • Adjust brooms frequently to maximize efficiency of sweeping operations. • After sweeping is finished, properly dispose of sweeper wastes at an approved dumpsite.

SE-10 Storm Drain Inlet Protection

Description and Purpose: Large amounts of sediment may enter the storm drain system when storm drains are installed before upslope drainage areas are stabilized, or where construction is adjacent to an existing storm drain. In cases of extreme sediment loading, the storm drain itself may clog and lose a major portion of its capacity. To avoid these problems, it is necessary to prevent sediment from entering the system at the inlets.

Application: Every storm drain inlet receiving sediment-laden runoff from construction activities should be protected.

Limitations

- Drainage area should not exceed 1 acre.
- Requires an adequate area for water to pond without encroaching into portions of the roadway subject to traffic.
- Inlet protection is a secondary measure and usually requires other methods of temporary protection up gradient to prevent sediment-laden stormwater and non-stormwater discharges from entering the storm drain system.
- Sediment removal may be difficult in high flow conditions or if runoff is heavily sediment laden. If high flow conditions are expected, use other onsite sediment trapping techniques in conjunction with inlet protection.
- Frequent maintenance is required.
- For drainage areas larger than 1 acre, runoff should be routed to a sediment-trapping device designed for larger flows. See BMPs SE-2, Sediment Basin, and SE-3, Sediment Traps.

Design and layout:

Storm drain inlet protection consists of a sediment filter or an impounding area around or upstream of a storm drain, drop inlet, or curb inlet. Storms drain inlet protection measures temporarily pond runoff before it enters the storm drain, allowing sediment to settle. Some filter configurations also remove sediment by filtering, but usually the ponding action results in the greatest sediment reduction

- The location and extent of ponding, and the extent of diversion, can usually be controlled through appropriate placement of the inlet protection device. In some cases, moving the inlet protection device a short distance upstream of the actual inlet can provide more efficient sediment control, limit ponding to desired areas, and prevent or control diversions.

Maintenance and Inspection:	• Verify that activity-based BMPs are in place prior to the commencement of associated activities. • Inspect inlet protection during regular weekly, pre-rain, extended event, and post rain event inspections. • Sediment should be removed when the inlet protection becomes clogged or sediment accumulation reaches one-third of the barrier height. Sediment removed during maintenance may be incorporated into earthwork on the site ore disposed at an appropriate location. • Remove inlet protection in the event of a flood or the potential to cause a safety hazard due to flooding. • Remove storm drain inlet protection once the drainage area is stabilized. o Clean and regrade area around the inlet and clean the inside of the storm drain inlet.

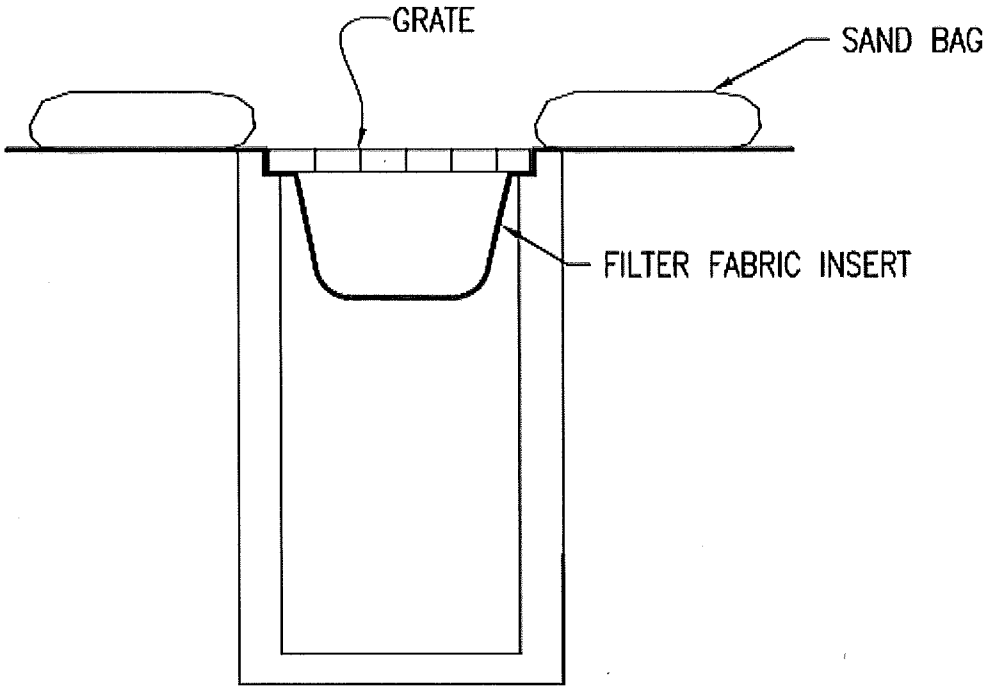
GRATE
SAND BAG
FILTER FABRIC INSERT

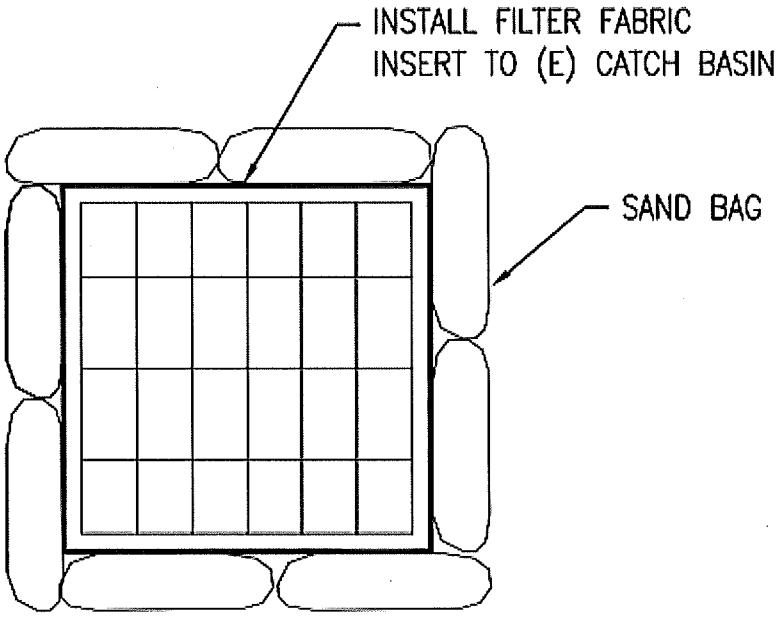
INSTALL FILTER FABRIC
INSERT TO (E) CATCH BASIN
SAND BAG

TC-1 Stabilized Construction Entrance/Exit

Description and Purpose

A stabilized construction access is defined by a point of entrance/exit to a construction site that is stabilized to reduce the tracking of mud and dirt onto public roads by construction vehicles.

Suitable Applications

Use at construction sites:

- Where dirt or mud can be tracked onto public roads.
- Adjacent to water bodies.
- Where poor soils are encountered.
- Where dust is a problem during dry weather conditions.

Implementation

Design and Layout for site entrance

- Construct on level ground where possible.
- Select 3 to 6 in. angular diameter stones.
- Use minimum depth of stones of 12 inches or as recommended by soils engineer.
- Construct length of 50 feet minimum and width of 24 feet minimum.
- Rumble racks constructed of steel panels with ridges and installed in the stabilized entrance/exit will help remove additional sediment and to keep adjacent streets clean.
- Provide ample turning radii as part of the entrance.
- Limit the points of entrance/exit to the construction site.
- Limit speed of vehicles to control dust.
- Grade each construction entrance/exit to prevent runoff from leaving the construction site.
- Route runoff from stabilized entrances/exits through a sediment trapping device before discharge.
- Design stabilized entrance/exit to support heaviest vehicles and equipment that will use it.
- Select construction access stabilization (aggregate, asphaltic concrete, concrete) based on longevity, required performance, and site conditions. Do not use asphalt concrete (AC) grindings for stabilized construction access/roadway.
- If aggregate is selected, place crushed aggregate over geotextile fabric to at least 12 inches in depth, or place aggregate to a depth recommended by a geotechnical engineer. A crushed aggregate greater than 3 in. but smaller than 6 in. should be used.
- Designate combination or single purpose entrances and exits to the construction site.
- Require that all associates, subcontractors, and suppliers utilize the stabilized construction access.
- Implement SE-7, Street Sweeping and Vacuuming, as needed.

Maintenance and Inspection:	• Verify that activity-based BMPs are in place prior to the commencement of associated activities. • Inspect stabilized exits during regular weekly, pre-rain, extended event, and post rain event inspections. • Remove aggregate, separate and dispose of sediment if construction entrance/exit is clogged with sediment. • Check for damage and repair as needed. • Replace gravel material when surface voids are visible. • Remove all sediment deposited on paved roadways within 24 hours. • Remove gravel and filter fabric at completion of construction.

Schematic for Construction Entrance

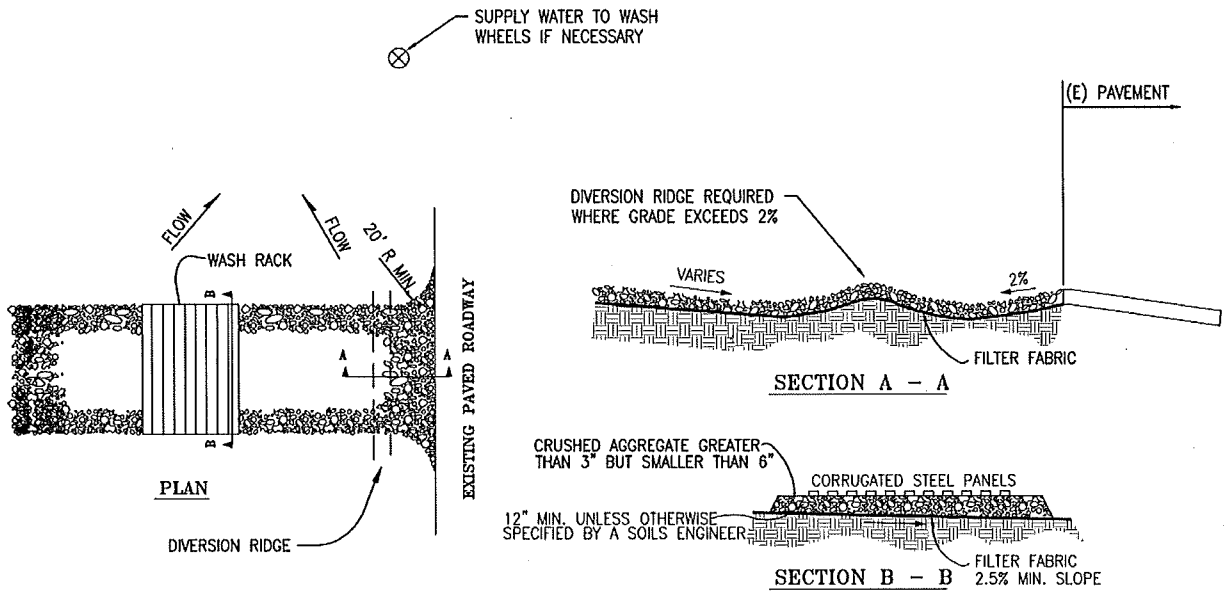

APPENDIX C

SFDPH Article 31 Particulate Monitoring System and Approval Form

APPENDIX C

DUST CONTROL PLAN
PARCELS A & A' PHASE I DEVELOPMENT
HUNTERS POINT SHIPYARD

PARTICULATE MONITORING SYSTEM

Particulate Monitoring Instrument Details

Real time particulate monitors with data-logging capabilities will be utilized to collect data. The network will consist of stationary perimeter monitors.

Perimeter Monitors

A perimeter monitoring network of real time particulate monitors will be established. Initially, one monitor will be placed upwind of site activities, one downwind of site activities and one trans-gradient to the wind direction. If new activities arise or come to completion within the same sub parcel (e.g. Hilltop), the perimeter monitor locations may expand or contract accordingly. Changes to location and number of the perimeter monitors must be approved by SFDPH prior to implementation.

The perimeter monitors results will be used to track compliance with the Perimeter Action Level and to guide the selection of additional mitigation measures, if found to be necessary.

Monitoring Frequency

Lennar may propose to reduce or discontinue particulate monitoring based on demonstrated and ongoing compliance with the DCP. If a reduction or cessation of particulate monitoring is approved by the SFDPH, the independent third party observer will still have the obligation to inspect the site activity, record observations and make recommendations for additional mitigation measures on the Independent Third Party Inspection Checklist for as long as required.

Monitoring Resumption

If monitoring is reduced or discontinued, Lennar will either start the cycle over again or will propose a new monitoring scheme by expanding or adjusting the already established perimeter monitors for the following reasons:

1. Verified visible dust complaints from tenants, workers or adjacent residents
2. Use of a new construction crew unfamiliar with the required dust control at this site
3. Voluntary election by the contractors or Lennar to restart the particulate monitoring instrumentation
4. Changes in site conditions that might warrant a restart of the particulate monitoring instrumentation

Particulate Monitoring Data Reporting

The particulate data will be reported as described in the DCP and on a schedule as listed in the Approval Form. The data reports will include a figure with the monitoring locations. If the monitor locations change due to weather pattern shifts or a shift in site activity, the new locations will be noted and marked on a map attached to the data reports. The data will be reviewed with the contractor on a schedule as approved in the Approval Form.

Independent Third Party Reporting

The Independent Third Party Inspection Checklist (Appendix D) will be completed, reviewed with contractor and submitted to SFDPH as described in the DCP with a schedule as specified on the Approval Form.

APPENDIX C
Dust Control Plan
PARCELS A & A′ PHASE I DEVELOPMENT
Hunters Point Shipyard

Particulate Monitoring System
Approval Form

DATE	
Name of person submitting request	
Company	
Role on Project	
Contact Information	

Proposed Changes from Previous Approval (include only those with changes)	
Number of days after SFDPH approval received that changes are anticipated to be implemented	
Particulate Monitor Model Number	
Perimeter Monitors	
• Number of Monitors	
• Location of Monitors	
• Perimeter Action Level	
• Averaging Time	
• Frequency of monitoring	
• Frequency of submittal of data to SFDPH (excel workbook with data and graph with Action Level depicted)	
• Frequency of data review with contractor	
Independent Third Party Inspection Checklist	
• Frequency of Inspections	
• Frequency of submittal of checklists to SFDPH (excel workbook with data and graph with Action Level depicted)	
• Frequency of checklist review with contractor	

Previously Approved and Unchanged Parameters	
Particulate Monitor Model Number	
Perimeter Monitors	
• Number of Monitors	
• Location of Monitors	
• Perimeter Action Level	
• Averaging Time	
• Frequency of monitoring	
• Frequency of submittal of data to SFDPH (excel workbook with data and graph with Action Level depicted)	
• Frequency of data review with contractor	
Independent Third Party Inspection Checklist	
• Frequency of Inspections	
• Frequency of submittal of checklists to SFDPH (excel workbook with data and graph with Action Level depicted)	
• Frequency of checklist review with contractor	

Please note: emails or other forms containing similar information may be used in place of this form.

APPENDIX D

SFDPH Article 31 Independent Third Party Inspection Checklist

APPENDIX D
Hunters Point Parcels A & A'
Asbestos Dust Mitigation & Fugitive Dust Control Plan
Independent Third Party Dust Inspection Checklist

Inspector Name & Company:	Date/Time:
Weather (include wind speed & direction, temp, overhead conditions, other):	BAAQMD Spare the Air day? ☐ Yes ☐No
Project Name and Location:	

1. **Equipment and Activity Description** Provide a description of equipment currently onsite and observed work activities. Use attached map to show locations of activities and to provide descriptions.
   A. **Equipment**

   B. **Activity Description**

2. **Observations**
   A. **Describe whether dust is being generated and whether it is crossing the project boundary.** If dust is present, describe contractor response and timing of response. Note location and activity at issue.

   B. **Describe conditions of paved roads both within the work area and at/adjacent to construction site exits.** Note whether trackout is present and contractor response.

   C. **Describe observed mitigation measures in use** (hoses, water trucks, street sweeper, hand sweeping, road wetting, exit protection including stabilized entrance/exit, wheel wash, etc.).

D. **Describe material handling activities and associated mitigation measures in use** (drop heights minimized, vehicles tarped, proper loading, driving speeds, offsite transport occurring, water added to material processing areas, water placed on internal haul routes, etc.).

E. **Describe stockpile control measures, temporary and final stabilization of inactive or completed areas.** Note location and type of stockpile control and/or stabilization methods.

3. **Monitor Information** Provide monitor number, current reading and time.

4. **Communications**

   A. **Provide details of communication with construction managers, site superintendants and/or regulatory agency personnel.** Include name(s) and time(s) of discussion. Include recommendations here for enhanced mitigation measures and/or contractor timeline to rectify a current issue.

   B. **Have any complaints been received via the Lennar Hotline?** If so, provide response.

5. **Offsite observations/activities.** Provide location and time along with the description.

6. **Comments**